RESIDENTIAL WOOD DECK CONSTRUCTION GUIDE

Based on the 2015 Michigan Residential Code
Revised May 17, 2016

The Following Organizations Support the use of this Guide:

The details in this document apply to residential decks only. Construction can not deviate from the details herein unless prior approval is obtained from the authority having jurisdiction. A copy of this document is required to be on the job site and available for each inspection.

Wood Deck Construction in accordance with this guide is acceptable in the following Michigan Communities:

Cities:

City of Rochester Hills	City of Livonia	City of Wyoming
City of Sterling Heights	City of Madison Heights	City of Zeeland
City of Auburn Hills	City of Muskegon	City of Marine City
City of Bloomfield Hills	City of New Baltimore	City of Battle Creek
City of Clawson	City of Northville	
City of Fenton	City of Norton Shores	
City of Ferndale	City of Novi	
City of Garden City	City of Oak Park	
City of Grand Haven	City of Orchard Lake	
City of Inkster	City of Plymouth	
City of Lathrup Village	City of Troy	
City of Lincoln Park	City of Warren	

Townships: ***Villages:***

Charter Township of Shelby	Charter Township of White Lake	Village of Holly
Charter Township of Bloomfield	Charter Township of Washington	Village of Leonard
Charter Township of Canton	Charter Township of Plainfield	Village of Webberville
Charter Township of Clinton		
Charter Township of Grand Haven		
Charter Township of Groveland		
Charter Township of Macomb		
Charter Township of Milford		
Charter Township of Oakland		
Charter Township of Orion		
Charter Township of Port Huron		
Charter Township of Royal Oak		

The following Contractors & Suppliers support this Wood Deck Construction Guide:

Contractors:

Autumn Wood Construction		
Horizon Builders Inc.		
Lars/David Inc.		

Suppliers:

Dillman & Upton		

RESIDENTIAL WOOD DECK CONSTRUCTION GUIDE

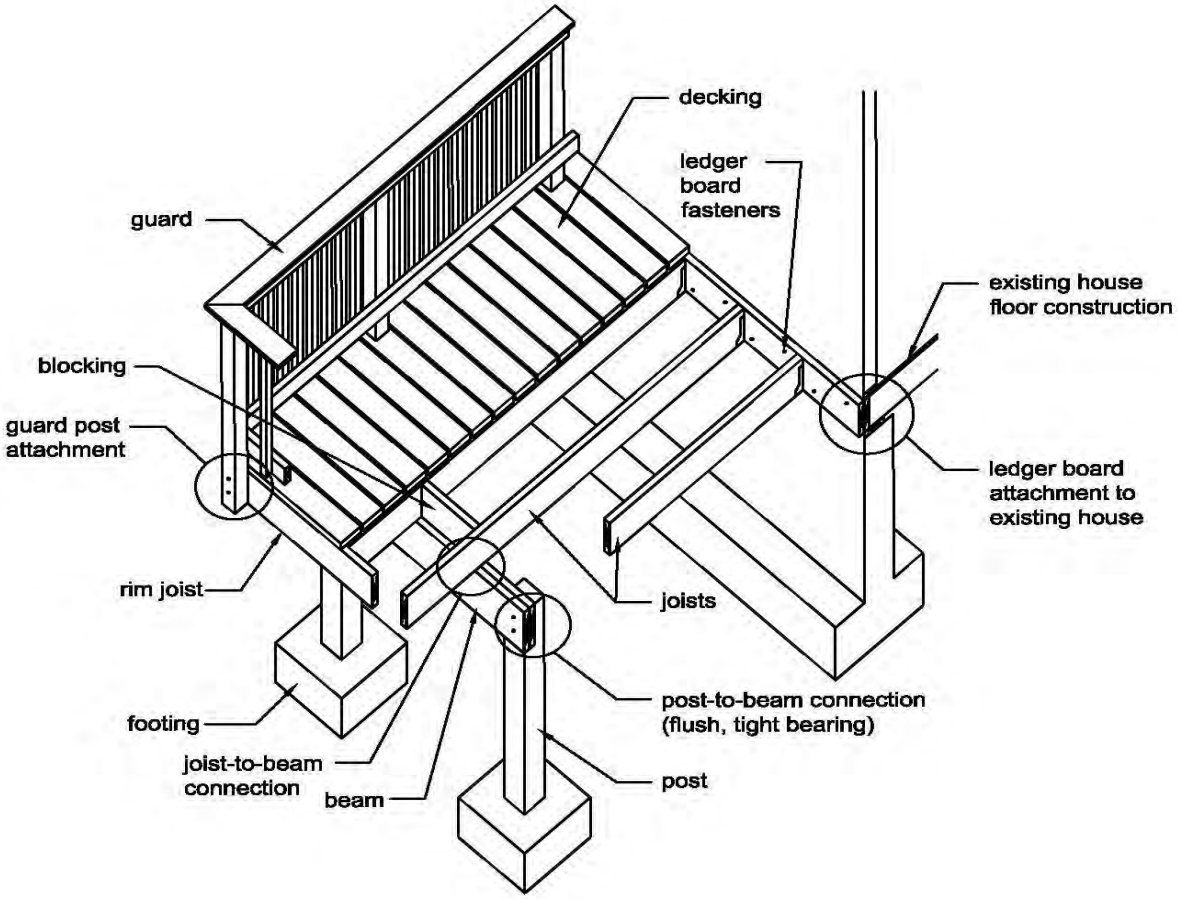

Courtesy of American Wood Council - Leesburg, VA

CONTENTS

	Page
General Information	2
Decking	3
Joists	4-5
Beams	6-8
Joist to Beam Connection	9
Joist Hangers	9-10
Post Requirements	10
Post to Beam Connection	11
Footings	12-14
Ledger Board Attachment	15-16
Prohibited Ledger Attachments	16
Ledger Board Fasteners	17-18
Deck Stability	18-22
Guards	23
Guard Post Attachment	23-24
Stair Requirements	25-27
Stair Footing	28
Stair Lighting	28
Framing a Chimney/Bay Window	28-29
Deck Framing Plan	29
Inspections Required	30
Community Specific Details	31-38

Solid vertical lines in the margins indicate a change from the previous Guide

GENERAL INFORMATION

1. This document applies to single level decks only.

2. The overall deck width at the house shall be equal to or greater than the distance the deck extends from the house.

3. All wood in contact with the ground shall be approved pressure treated wood suitable for ground contact.

4. All other wood not in contact with the ground shall be approved pressure treated, or naturally durable wood, such as; Redwood, Cedar, or other approved material.

5. Wood-Plastic Composite shall bear a label indicating the required performance levels and compliance to ASTM-D 7032. Wood-plastic composites shall be installed per the manufacturer's instructions. All plastic composite materials shall have a flame spread index of 200 or less when tested in accordance with ASTM E84 or UL 723.

6. All screws, nails, bolts, washers, and nuts used with preservative treated wood shall be hot-dipped zinc-coated galvanized steel, stainless steel, silicon bronze, or copper.

7. Hardware and connectors (joist hangers, or post anchors) shall be protected in accordance with the manufacturer's recommendations; minimum ASTM-A 653 Type G185 zinc-coated galvanized steel.

8. Information regarding permit, application, plan review, and inspection requirements can be found under "Community Specific Details."

9. This document is not intended to preclude the use of other construction methods or materials not shown herein.

10. Wood Decks shall also comply with the 2015 International Swimming Pool and Spa code Sections 306 and 703.

DECKING

- Spacing for joist supporting decking shall be in accordance with **Table A1**.
- Decking shall be wood 2x4, 2x6, five quarter board, or Wood-Plastic Composite sizes per the manufacturer's specifications.
- Wood decking shall be attached as shown in **Figure 1**. Decking should also be attached to the rim board with fasteners at 6" O.C.
- Each wood decking member must rest on three joists minimum.
- Wood-Plastic Composite Decking shall be installed in accordance with the manufacturer's installation instructions.

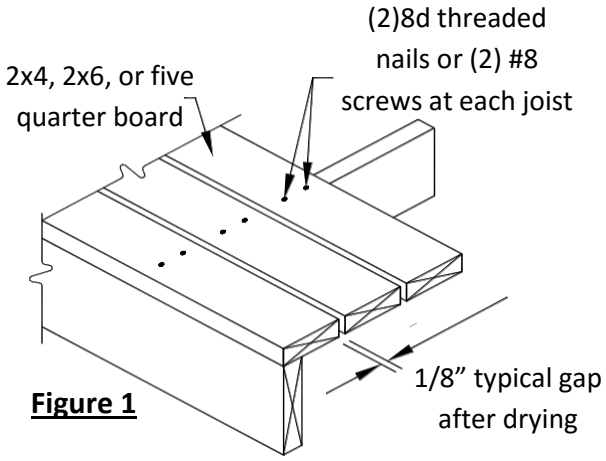

Figure 1

- Wood-Plastic Composite Decking must be labeled and the manufacturer's installation instructions shall be onsite for review by the inspector.
- A valid ICC Evaluation Report must be provided and approved by the local building official for any other decking products proposed.

Table A1 – Maximum Joist Spacing

Material Type and Nominal Size	Maximum On-Center Joist Spacing	
	Perpendicular to Joist	Diagonal to Joist[a]
1 1/4 inch thick plywood	16 inches	12 inches
2 inch thick plywood	24 inches	16 inches
Plastic Composite	In accordance with ASTM D7032 Label	In accordance with ASTM D7032 Label

a. Wood deck boards should not exceed an angle of 45 degrees from perpendicular

- The joist span L is the distance between the two points supporting the joist and does not include the length of the overhang (See **Figures 2A, 2B**, and **2C**). Use **Table 1** to determine allowable joist span L_J. Allowable overhang length is L_O as noted in **Table 1** or L/4; whichever is less.

Figure 2A. Joist Span – Joist Attached at House and Bearing over Beam

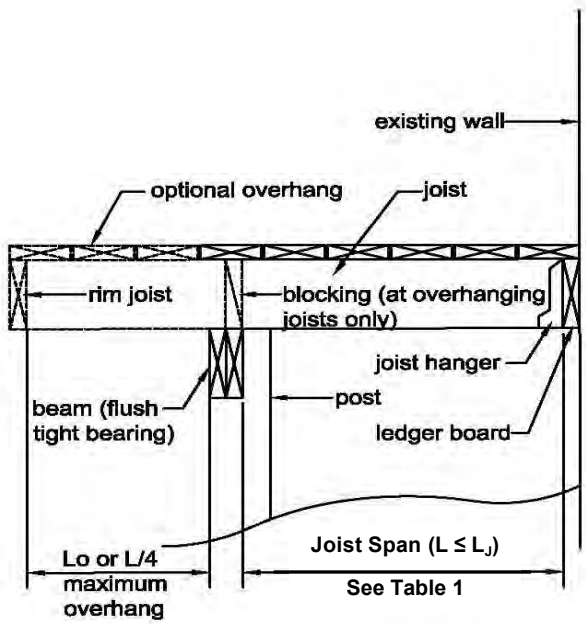

Courtesy of American Wood Council - Leesburg, VA

Figure 2B. Joist Span – Joists Attached at House and to Side of Beam

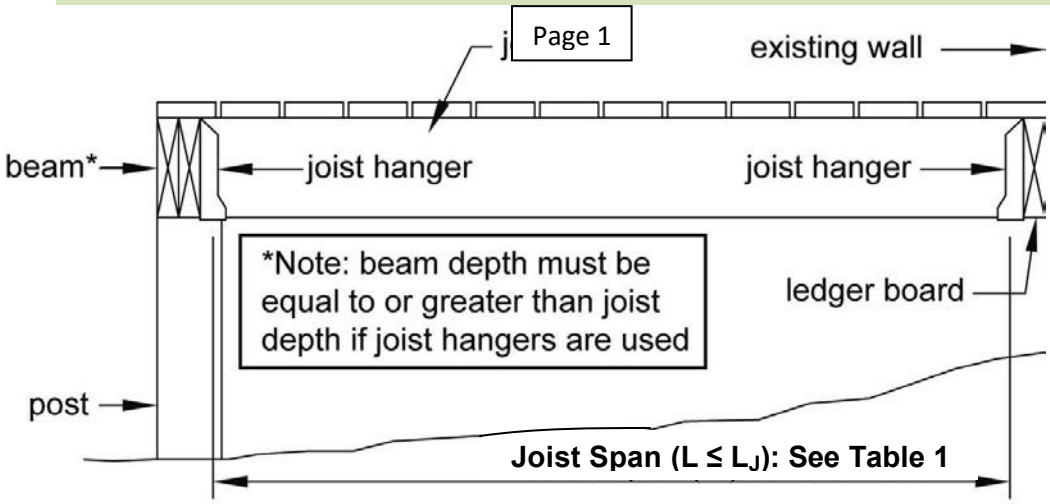

Courtesy of American Wood Council - Leesburg, VA

Figure 2C. Joist Span – Non-Ledger Deck

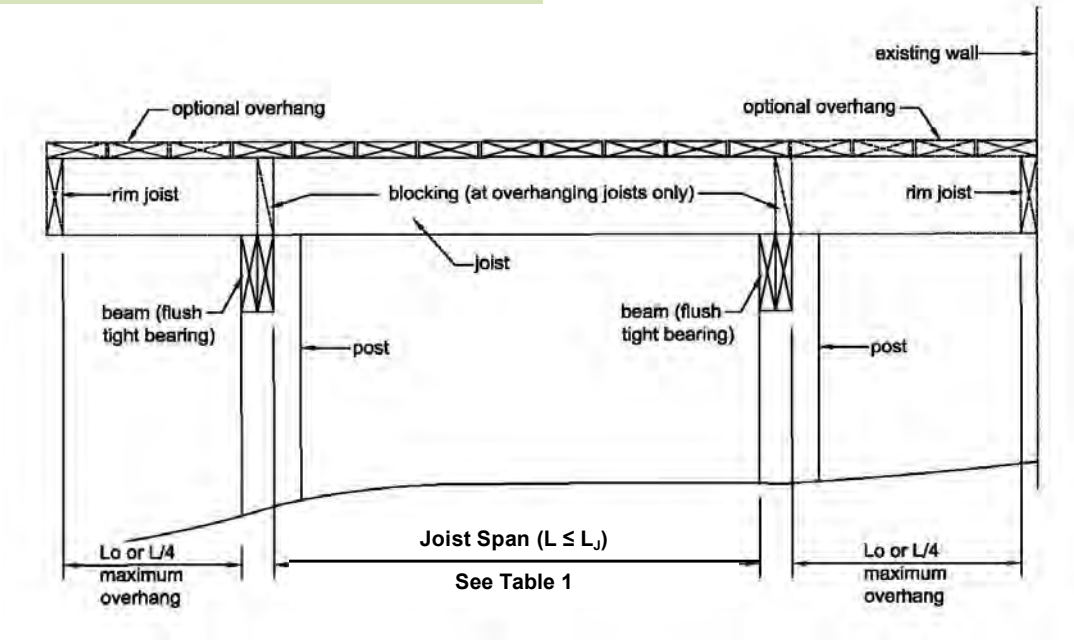

Courtesy of American Wood Council - Leesburg, VA

Table 1. Maximum Joist Spans and Overhangs[1]

		Joist Spacing (O.C.)					
		12"	16"	24"	12"	16"	24"
Species	Size	Allowable Span[2] (L_J)			Allowable Overhang[3] (L_O)		
Southern Pine	2x6[6]	9'-11"	9'-0"	7'-7"	1'-0"	1'-1"	1'-3"
	2x8	13'-1"	11'-10"	9'-8"	1'-10"	2'-0"	2'-4"
	2x10	16'-2"	14'-0"	11'-5"	3'-1"	3'-5"	2'-10"
	2x12	18'-0"[7]	16'-6"	13'-6"	4'-6"	4'-2"	3'-4"
Douglas Fir-Larch, Hem-Fir, Spruce-Pine-fire[4]	2x6[6]	9'-6"	8'-4"	6'-10"	0'-11"	1'-0"	1'-2"
	2x8	12'-6"	11'-1"	9'-1"	1'-8"	1'-10"	2'-2"
	2x10	15'-8"	13'-7"	11'-1"	2'-10"	3'-2"	2'-9"
	2x12	18'-0"[7]	15'-9"	12'-10"	4'-4"	3'-11"	3'-3"
Redwood, Western Cedars, Ponderosa Pine[5], Red Pine[5]	2x6[6]	8'-10"	8'-0"	6'-10"	0'-9"	0'-10"	0'-11"
	2x8	11'-8"	10'-7"	8'-8"	1'-5"	1'-7"	1'-9"
	2x10	14'-11"	13'-0"	10'-7"	2'-5"	2'-7"	2'-8"
	2x12	17'-5"	15'-1"	12'-4"	3'-7"	3'-9"	3'-1"

1. Assumes 40 psf live load, 10 psf dead load, No. 2 stress grade, and wet service conditions.
2. Assumes L/360 deflection.
3. Maximum allowable overhang cannot exceed L/4 or ¼ of actual main span. Assumes cantilever length/180 deflection with 220 point load (See Figure 2A and 2C).
4. Incising assumed for Douglas fir-larch, hem-fir, and spruce-pine-fir.
5. Design Values based on northern species with no incising assumed.
6. Ledger shall be a minimum of 2x8 nominal. Where guards are required, outside joists and rim joists shall be a minimum length of 2x8 nominal.
7. Joist length prescriptively limited to 18'-0" for footing design.

- Beam span is measured between the supporting posts and does not include the overhang. See **Figure 3**.
- Beam size is determined by using **Table 2A** for joist framing from one side only. Joists may bear on the beam and extend past the beam centerline up to the lesser of L_O or L/4, as shown in **Figures 2A and 2C**.
- Use **Table 2B** for joist framing from both sides.
- Beam may overhang past the supporting post up to one-fourth the beam span as indicated in **Figure 3**.
- Beams with multiple members shall be assembled in accordance with **Figure 4**.

Figure 3. Beam Span Types

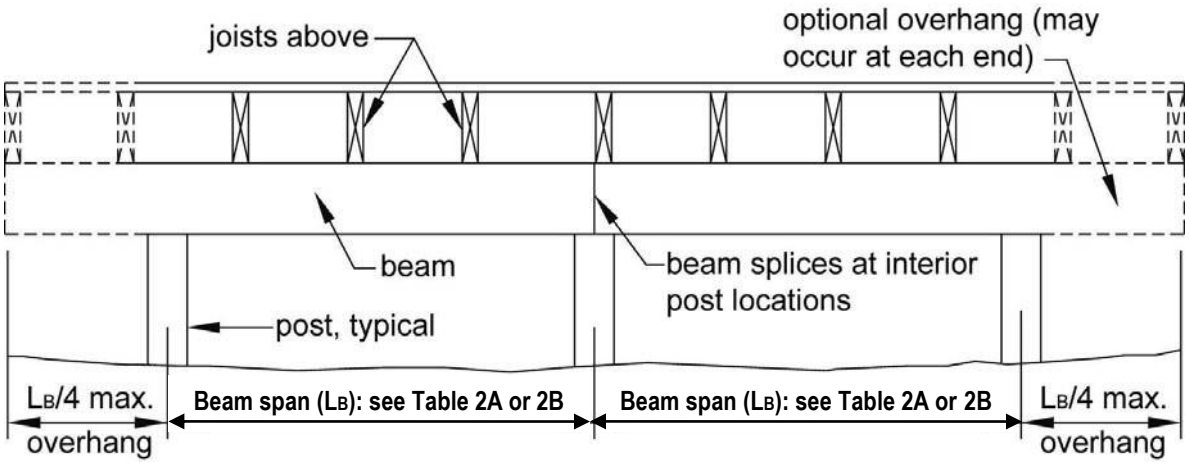

Courtesy of American Wood Council - Leesburg, VA

Figure 4. Beam Assembly Details

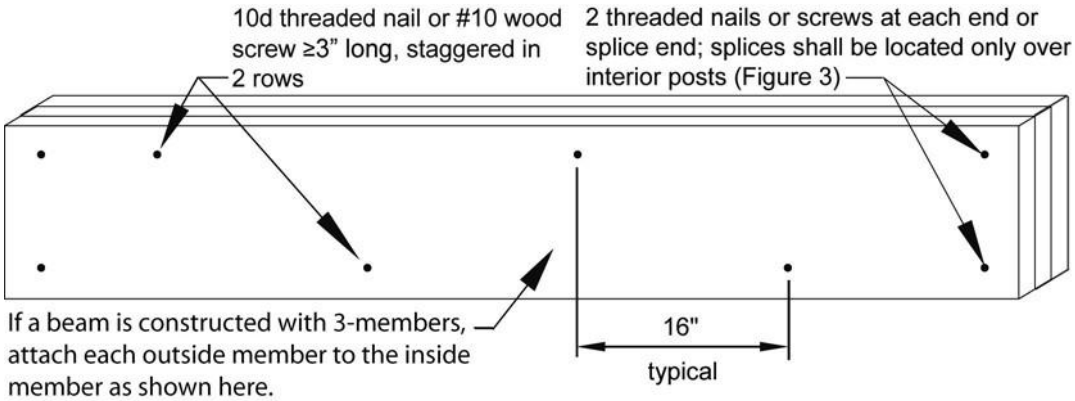

Courtesy of American Wood Council - Leesburg, VA

Table 2A. Deck Beam Spans (L_B)[1] for Joists Framing from One Side Only

Species	Size[4]	Joist Spans (L) Less Than or Equal to: 6'	8'	10'	12'	14'	16'	18'
Southern Pine	2-2x6	6'-11'	5'-11"	5'-4"	4'-10"	4'-6"	4'-3"	4'-0"
	2-2x8	8-9"	7'-7"	6'-9"	6'-2"	5'-9"	5'-4"	5'-0"
	2-2x10	10'-4"	9'-0"	8'-0"	7'-4"	6'-9"	6'-4"	6'-0"
	2-2x12	12'-2"	10'-7"	9'-5"	8'-7"	8'-0"	7'-6"	7'-0"
	3-2x6	8'-2"	7'-5"	6'-8"	6'-1"	5'-8"	5'-3"	5'-0"
	3-2x8	10'-10"	9'-6"	8'-6"	7'-9"	7'-2"	6'-8'	6'-4"
	3-2x10	13'-0"	11'-3"	10'-0"	9'-2"	8'-6"	7'-11"	7'-6"
	3-2x12	15'-3"	13'-3"	11”-10"	10'-9"	10”-0"	9'-4"	8'-10"
Douglas Fir-Larch[2], Hem-Fir[2], Spruce-Pine-Fir[2], Redwood, Western Cedars, Ponderosa Pine[3], Red Pine[3]	3x6 or 2-2x6	5'-5"	4'-8"	4'-2"	3'-10"	3'-6"	3'-1"	2'-9"
	3x8 or 2-2x8	6'-10"	5'-11"	5'-4"	4'-10"	4'-6"	4'-1"	3'-8"
	3x10 or 2-2x10	8'-4"	7'-3"	6'-6"	5'-11"	5'-6"	5'-1"	4'-8"
	3x12 or 2-2x12	9'-8"	8'-5"	7'-6"	6'-10"	6'-4"	5'-11"	5'-7"
	4x6	6'-5"	5'-6"	4'-11"	4'-6"	4'-2"	3'-11"	3'-8"
	4x8	8'-5"	7'-3"	6'-6"	5'-11"	5'-6"	5'-2"	4'-10"
	4x10	9'-11"	8'-7"	7'-8"	7'-0"	6'-6"	6'-1"	5'-8"
	4x12	11'-5"	9'-11"	8'-10"	8'-1"	7'-6"	7'-0"	6'-7"
	3-2x6	7'-4"	6'-8"	6'-0"	5'-6"	5'-1"	4'-9"	4'-6"
	3-2x8	9'-8"	8'-6"	7'-7"	6'-11"	6'-5"	6'-0"	5'-8"
	3-2x10	12'-0"	10'-5"	9'-4"	8'-6"	7'-10"	7'-4"	6'-11"
	3-2x12	13'-11"	12'-1"	10'-9"	9'-10"	9'-1"	8'-6"	8'-1"

1. Assumes 40 psf live load, 10 psf dead load, L/360 simple span beam deflection limit, cantilever length/180 deflection limit, No. 2 stress grade, and wet service conditions.
2. Incising assumed for Douglas fir-larch, hem-fir, and spruce-pine-fir.
3. Design values based on northern species with no incising assumed.
4. Beam depth must be equal to or greater than joist depth if joist hangers are used (see **Figure 5**, option 3).

Table 2B. Deck Beam Spans (L_B)[1,5] for Joists Framing from Both Sides

Species	Size[4]	Joist Spans (L)[6] Loading Beam from Both Sides in Feet:					
		6'	8'	10'	12'	14'	16'
Southern Pine	2-2x6	5'-8”	4'-11"	4'-5"	4'-0"	3'-9"	3'-6"
	2-2x8	7'-2"	6'-3"	5'-7"	5'-1"	4'-8"	4'-5"
	2-2x10	8'-7"	7'-5"	6'-8"	6'-1"	5'-7"	5'-3'
	2-2x12	10'-2"	8'-10"	7'-11"	7'-2"	6'-8"	6'-3"
	3-2x6	7'-6"	6'-6"	5'-9"	5'-3"	4'-11"	4'-7"
	3-2x8	9'-5"	8'-2"	7'-4"	6'-8"	6'-2"	5'-9"
	3-2x10	11'-4"	9'-9"	8'-9"	8'-0"	7'-5"	6'-11"
	3-2x12	13'-5"	11'-7"	10'-4"	9'-6"	8'-9"	8'-2"
Douglas Fir-Larch[2], Hem-Fir[2], Spruce-Pine-Fir[2], Redwood, Western Cedars, Ponderosa Pine[3], Red Pine[3]	2-2x6	5’-5"	4'-8"	4'-2"	3'-10"	3'-6"	3'-4"
	2-2x8	6'-11"	5'-11"	5'-4"	4'-10"	4'-6"	4'-2"
	2-2x10	8'-5"	7'-3"	6'-6"	5’-11"	5'-6"	5'-1"
	2-2x12	9'-9"	8'-5"	7'-6"	6'-10"	6'-4"	5'-11"
	3-2x6	7'-2"	6'-2"	5'-6"	5'-0"	4'-8"	4'-4"
	3-2x8	9'-1"	7'-10"	7'-0"	6'-4"	5'-11"	5'-6"
	3-2x10	11'-1"	9'-7"	8'-6"	7'-9"	7'-3"	6'-9"
	3-2x12	12'-10"	11'-1"	9'-11"	9'-1"	8'-4"	7'-10"

1. Assumes 40 psf live load, 10 psf dead load, L/360 simple span beam deflection limit, L/180 cantilever deflection limit, No. 2 grade, and wet service conditions.
2. Incising assumed for refractory species including Douglas fir-larch, hem-fir, and spruce-pine-fir.
3. Design values based on northern species with no incising assumed.
4. Beam depth must be equal to or greater than joist depth if joist hangers are used.
5. Loading based on joist span L on each side of beam x ½ x (10 psf dead load + 40 psf live load).
6. Joist span in table based on joist span on each side of beam x ½. Example: Joist span L between Beams A and B = 10 ft and joist span L between Beams B and C = 6 ft. 10ft + 6ft = 16ft x ½ = 8. (Joist span used in **Table 2B**).

JOIST TO BEAM CONNECTION

- Attach joist to beam using one of the options shown in **Figure 5**. Blocking is required between the joists at the beam when the joist overhangs past the beam.
- Hurricane clips or mechanical fasteners used for option 2 must have a minimum capacity of 100lbs in both uplift and lateral load directions. Must be installed per manufacturer's requirements.

Figure 5. Joist-to-Beam Detail

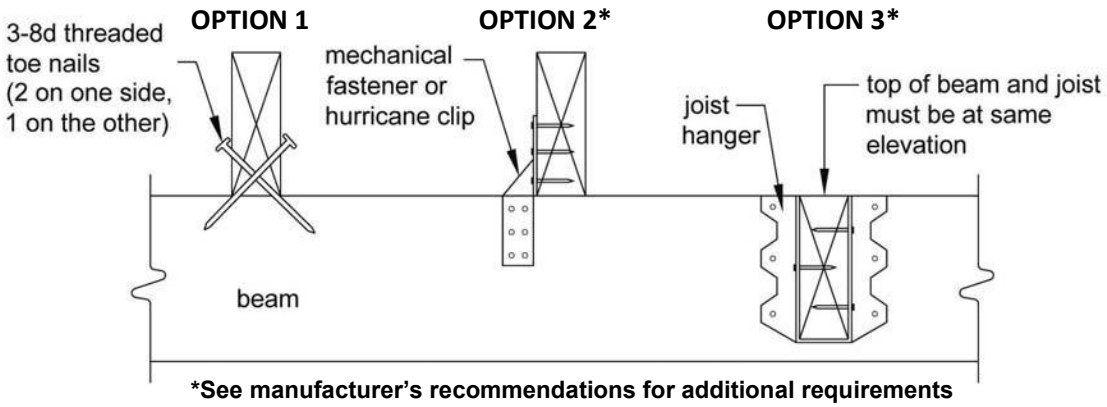

Courtesy of American Wood Council - Leesburg, VA

JOIST HANGERS

- Joist hanger shall have a depth of at least 60% of the joist depth. See **Figure 6**.
- Joist hangers shall be sized properly to accommodate the load and number of plies being carried.
- Hangers shall not be bent to accommodate field conditions.
- Brackets or clip angles are not allowed for joist connections.
- Fasten joist hangers per manufacturer's recommendation.
- Joist hangers with inside flanges shall be used as field conditions dictate.

Figure 6. Typical Joist Hangers

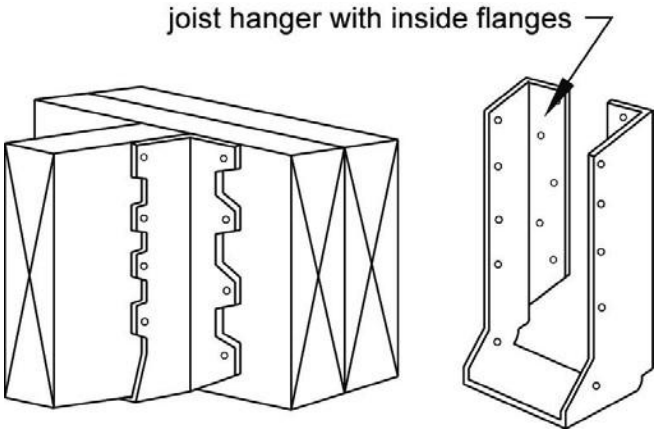

Courtesy of American Wood Council - Leesburg, VA

POST REQUIREMENTS

- Post size and maximum height shall be in accordance with **Table 3**.
- Post height is measured from grade or top of the footing to the underside of the beam.
- Cut ends of posts shall be field treated with an approved preservative (such as Copper Naphtenate).

Table 3 - Maximum Post Height

Post Size	Maximum Height
4x4	8'-0"
4x6	8'-0"
6x6	14'-0"

- Beams shall be attached to the post by one of the acceptable methods shown in **Figure 7**.
- 6x6 post minimum required where post supports a beam splice.
- Attachment of the beam to the side of the post is prohibited.

Figure 7. Post to Beam Connection

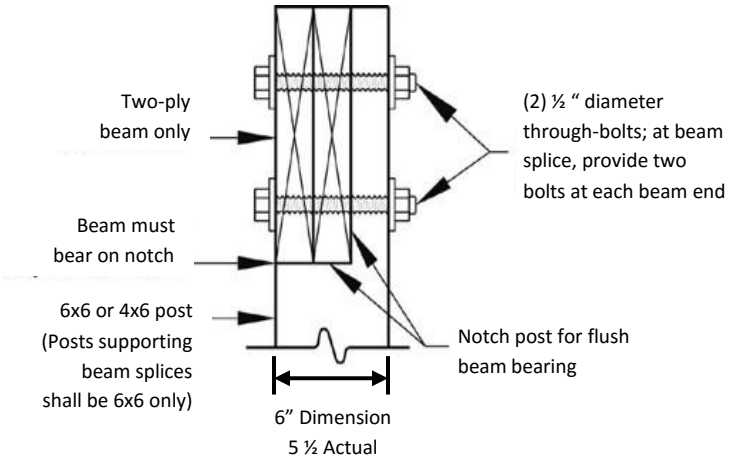

Notched Post

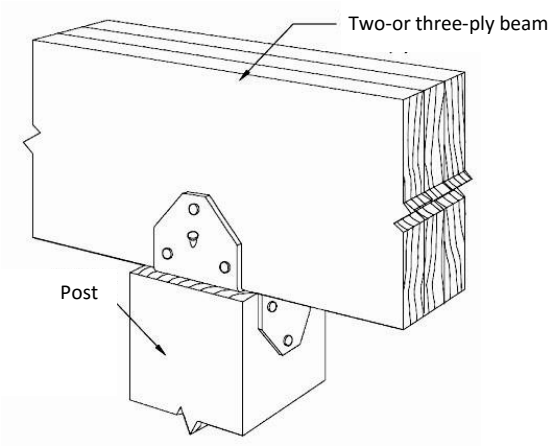

Post Cap

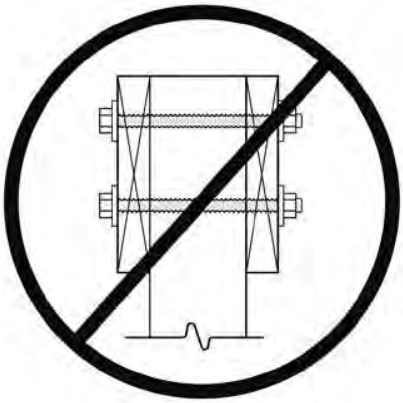

Prohibited Connection

Courtesy of American Wood Council - Leesburg, VA

- Concrete shall have a minimum compressive strength of 2,500 lbs per square inch.
- Footing size and thickness shall be in accordance with **Table 4** for 1,500 psf soil bearing capacity and **Table 4A** for 2,000 psf soil bearing capacity.
- See **Figure 8** for typical footing options.
- Post shall be centered on the footing.
- All footings shall bear on undisturbed soil at least 42" below grade. Footing inspection is required prior to placement of concrete.
- Footings closer than 5'-0" to an existing house foundation wall must bear on undisturbed soil at the same elevation as the house foundation.

Figure 8. Typical Footing Options

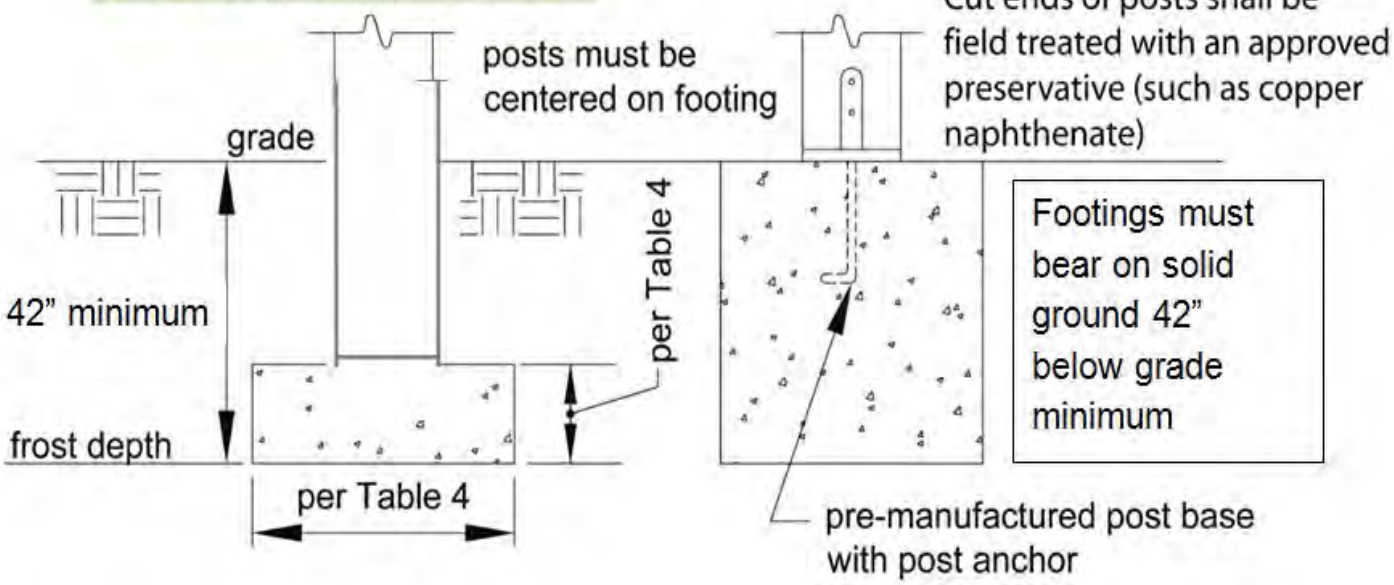

Table 4. Footing Sizes[1,2,3,4]

Beam Span L_B	Joist Span One side L	Joist Span Two sides L	Round Footing Diameter	Square Footing Dimension	Footing Thickness
6’	≤ 10’		16”	14”	7”
	≤ 14’		19”	17”	7”
	≤ 18’		21”	19”	8”
6’		≤ 10’	19”	17”	8”
		≤ 14’	23”	20”	9”
		≤ 18’	26”	23”	11”
8’	≤ 10’		18”	16”	7”
	≤ 14’		22”	19”	9”
	≤ 18’		24”	22”	10”
8’		≤ 10’	22”	20”	9”
		≤ 14’	26”	23”	11”
		≤ 18’	30”	26”	12”
10’	≤ 10’		20”	18”	8”
	≤ 14’		24”	22”	10”
	≤ 18’		27”	24”	11”
10’		≤ 10’	25”	22”	10”
		≤ 14’	29”	26”	12”
		≤ 18’	33”	29”	14”
12’	≤ 10’		22”	20”	9”
	≤ 14’		27”	24”	11”
	≤ 18’		30”	27”	13”
12’		≤ 10’	27”	24”	11”
		≤ 14’	32”	28”	14”
		≤ 18’	36”	32”	16”
14’	≤ 10’		24”	21”	10”
	≤ 14’		29”	26”	12”
	≤ 18’		32”	29”	14”
14’		≤ 10’	29”	26”	12”
		≤ 14’	35”	31”	15”
		≤ 18’	39”	35”	17”
16’	≤ 10’		25”	23”	10”
	≤ 14’		31”	27”	13”
	≤ 18’		35”	31”	15”
16’		≤ 10’	31”	28”	13”
		≤ 14’	37”	33”	16”
		≤ 18’	42”	37”	18”
18’	≤ 10’		27”	24”	11”
	≤ 14’		33”	29”	14”
	≤ 18’		37”	33”	16”
18’		≤ 10’	33”	29”	14”
		≤ 14’	39”	35”	17”
		≤ 18’	44”	39”	19”

1. Assumes 1,500 psf soil bearing capacity
2. Assumes 2.500 psf compressive strength of concrete
3. Assumes 40 psf live load and 10 psf dead load
4. Assumes the following joist cantilever;
    a. 18” for joist span ≤ 10’
    b. 30” for joist span ≤ 14’
    c. 36” for joist span ≤ 18’

Table 4A. Footing Sizes[1,2,3,4] *Note: Table 4A may be used when approved by the local Building Official based on soil conditions.

Beam Span L_B	Joist Span One side L	Joist Span Two sides L	Round Footing Diameter	Square Footing Dimension	Footing Thickness
6’	≤ 10’		13”	12”	6”
	≤ 14’		16”	14”	6”
	≤ 18’		18”	16”	7”
6’		≤ 10’	17”	15”	6”
		≤ 14’	20”	17”	8”
		≤ 18’	22”	20”	9”
8’	≤ 10’		16”	14”	6”
	≤ 14’		19”	17”	7”
	≤ 18’		21”	19”	8”
8’		≤ 10’	19”	17”	8”
		≤ 14’	23”	20”	9”
		≤ 18’	26”	23”	11”
10’	≤ 10’		17”	15”	7”
	≤ 14’		21”	19”	8”
	≤ 18’		24”	21”	10”
10’		≤ 10’	21”	19”	9”
		≤ 14’	25”	22”	10”
		≤ 18’	29”	25”	12”
12’	≤ 10’		19”	17”	7”
	≤ 14’		23”	20”	9”
	≤ 18’		26”	23”	11”
12’		≤ 10’	23”	21”	10”
		≤ 14’	28”	25”	12”
		≤ 18’	31”	28”	13”
14’	≤ 10’		21”	18”	8”
	≤ 14’		25”	22”	10”
	≤ 18’		28”	25”	12”
14’		≤ 10’	25”	22”	10”
		≤ 14’	30”	27”	13”
		≤ 18’	34”	30”	15”
16’	≤ 10’		22”	20”	9”
	≤ 14’		27”	24”	11”
	≤ 18’		30”	27”	13”
16’		≤ 10’	27”	24”	11”
		≤ 14’	32”	28”	14”
		≤ 18’	36”	32”	16”
18’	≤ 10’		23”	21”	10”
	≤ 14’		28”	25”	12”
	≤ 18’		32”	28”	13”
18’		≤ 10’	29”	25”	12”
		≤ 14’	34”	30”	15”
		≤ 18’	38”	34”	17”

1. Assumes 2,000 psf soil bearing capacity
2. Assumes 2,500 psf compressive strength of concrete
3. Assumes 40 psf live load and 10 psf dead load
4. Assumes the following joist cantilever:
   a. 18” for joist span ≤ 10’
   b. 30” for joist span ≤ 14’
   c. 36” for joist span ≤ 18’

LEDGER BOARD ATTACHMENTS

General requirements

- Ledger board depth shall be greater than or equal to the depth of the deck joists, but not less than a 2x8.
- The ledger board shall be attached in accordance with one of the conditions shown in **Figures 10** and **11**.
- The existing band board shall be capable of supporting the deck. If this cannot be verified or existing conditions differ from the details herein, then a free-standing deck or an engineered design is required.
- The top of the ledger board and top of the deck joists shall be at the same elevation.

Wood I-Joists as shown in **Figure 9**, located inside the house, must have a 2x band board, or a minimum 1-inch thick engineered wood product (EWP) band board capable of supporting a deck. If a minimum 1-inch EWP or 2x band board is not present, then a free-standing deck is required.

Figure 9: Wood I-Joists

Siding and Flashing

- The exterior finish, i.e., house siding, must be removed prior to the installation of the ledger board.
- Continuous flashing with a drip edge, as shown in **Figure 10**, is required at the ledger board when attached to wood-framed construction.
- Flashing shall be copper (attached using copper nails only), stainless steel, UV resistant plastic or galvanized steel coated with 1.85 ounces of zinc per square foot (G-185 coating).
- Flashing at a door threshold shall be installed to prevent water intrusion from rain or melting snow.

Figure 10. General Attachment of Ledger Board to Band Joist or Rim Board

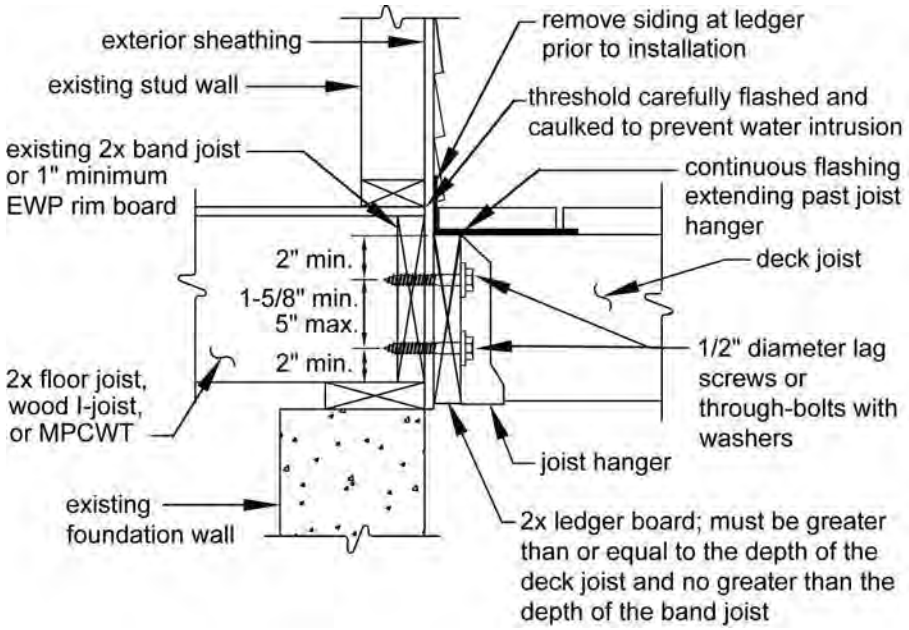

Courtesy of American Wood Council - Leesburg, VA

Figure 11. Attachment of Ledger Board to Foundation Wall (Concrete or Solid Masonry)

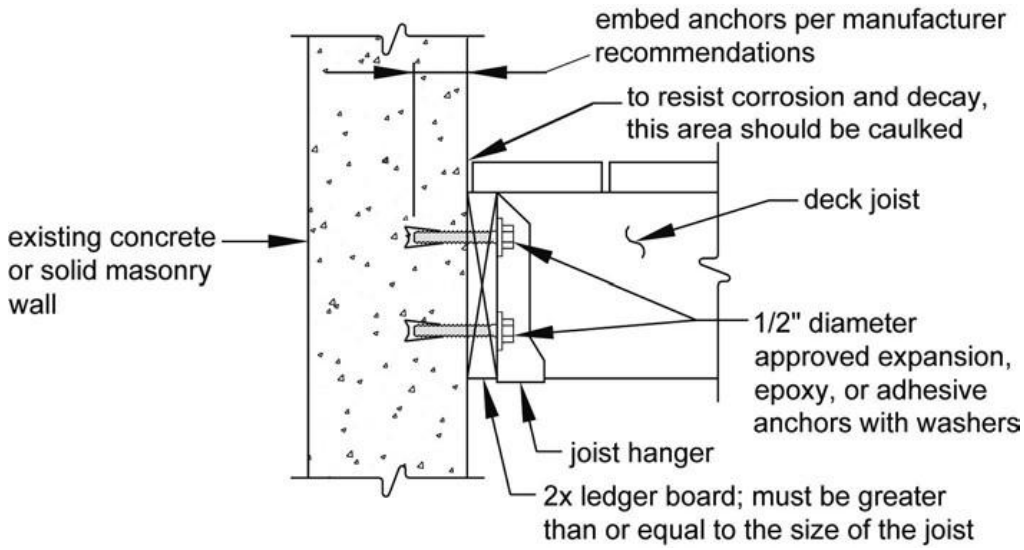

Courtesy of American Wood Council - Leesburg, VA

PROHIBITED LEDGER ATTACHMENTS

The ledger board attachments shown in **Figure 12** are prohibited. These conditions require a free-standing deck design.

Figure 12. Prohibited Ledger Attachments

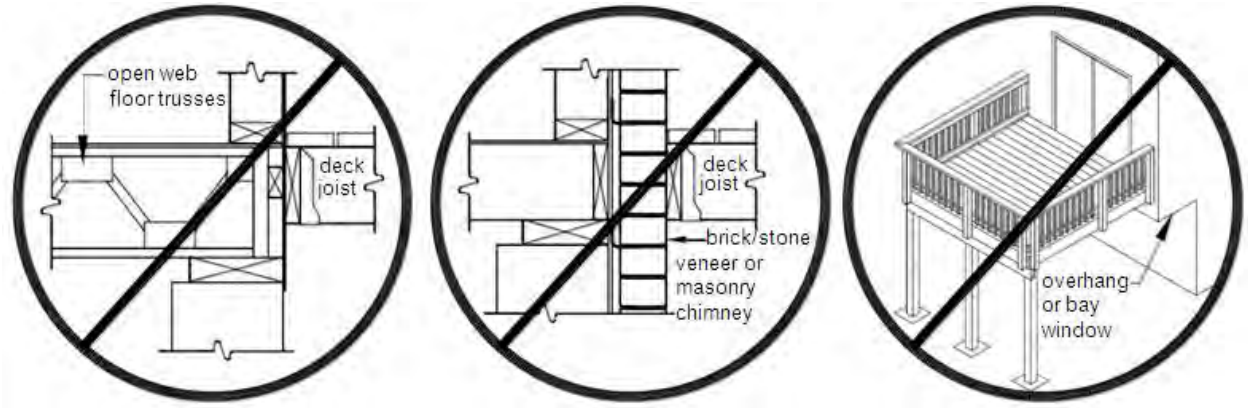

Courtesy of American Wood Council - Leesburg, VA

- Spacing and placement of fasteners shall be in accordance with **Figure 14** and **Table 5**.
- Lead anchors are prohibited.
- See General Information #6.
- **Thru-Bolts** shall have a diameter of ½". Washers are required at the bolt head and nut.
- **Expansion and Adhesive Anchors:** Use approved expansion or adhesive anchors when attaching a ledger board to a concrete or solid masonry wall, as shown in **Figure 11**. Expansion and adhesive anchor bolts shall have a diameter of ½", be equipped with washers, and installed per manufacturer's instructions.
- **Lag Screws** shall have a diameter of ½". Lag screws may be used only when the field conditions conform to those shown in **Figure 10**. See **Figure 13** for lag screw requirements. Lag screws shall be installed with washers.

Figure 13. Lag Screw Requirements

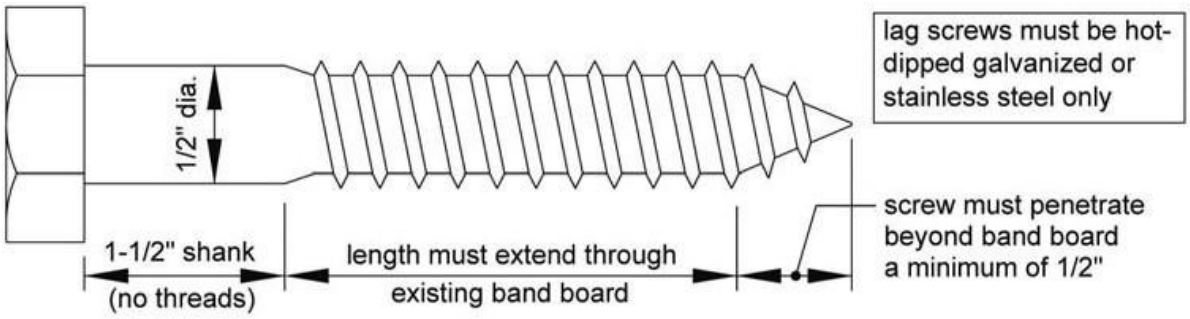

Courtesy of American Wood Council - Leesburg, VA

Figure 14. Ledger Fastener Spacing and Clearances

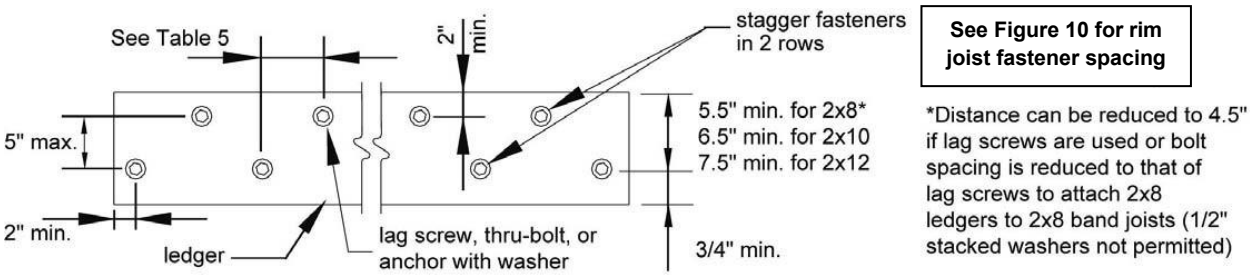

Courtesy of American Wood Council - Leesburg, VA

Table 5. Fastener Spacing for a Southern Pine, Douglas-Fir-Larch, or Hem-Fir Deck Ledger and a 2-inch Nominal Solid-Sawn Spruce-Pine-Fir Band Joist or EWP Rim Board[3,4,5,6,8]

(Deck Live Load = 40 psf, Deck Dead Load = 10 psf)

		Joist Span						
	Rim Board or Band Joist	6'-0" and less	6'-1" to 8'-0"	8'-1" to 10'-0"	10'-1" to 12'-0"	12'-1" to 14'-0"	14'-1" to 16'-0"	16'-1" to 18'-0"
Connection Details	**On-Center Spacing of Fasteners**							
$^1/_2$" diameter lag screw[1] with $^{15}/_{32}$" maximum sheathing	1" EWP	24"	18"	14"	12"	10"	9"	8"
	1-$^1/_8$" EWP	28"	21"	16"	14"	12"	10"	9"
	1-$^1/_2$" Lumber	30"	23"	18"	15"	13"	11"	10"
$^1/_2$" diameter bolt with $^{15}/_{32}$" maximum sheathing	1" EWP	24"	18"	14"	12"	10'	9"	8"
	1-$^1/_8$" EWP	28"	21"	16"	14"	12"	10"	9"
	1-$^1/_2$" Lumber	36"	36"	34"	29"	24"	21"	19"
$^1/_2$" diameter bolt with $^{15}/_{32}$" maximum sheathing and $^1/_2$" stacked washers[2,7]	1-$^1/_2$" Lumber	36"	36"	29"	24"	21"	18"	16"

1. The tip of the lag screw shall fully extend beyond the inside face of the band joist.
2. The maximum gap between the face of the ledger board and face of the wall sheathing shall be ½".
3. Ledgers shall be flashed or caulked to prevent water from contacting the house band joist (see Figures 10, 16, and 17).
4. Lag screws and bolts shall be staggered per Figure 14.
5. Deck ledgers shall be minimum 2x8 pressure-preservative-treated No.2 grade lumber, or other approved materials as established by standard engineering practice.
6. When solid-sawn pressure-preservative-treated deck ledgers are attached to engineered wood products (minimum 1" thick wood structural panel band joist or structural composite lumber including laminated veneer lumber), the ledger attachment shall be designed in accordance with accepted engineering practice. Tabulated values based on 300 lbs and 350 lbs for 1" and 1-$^1/_8$" EWP rim board, respectively.
7. Wood structural panel sheathing, gypsum board sheathing, or foam sheathing not exceeding 1" thickness shall be permitted. The maximum distance between the face of the ledger board and the face of the band joist shall be 1".
8. Fastener spacing also applies to southern pine, Douglas fir-larch, and hem-fir band joists.

Courtesy of American Wood Council - Leesburg, VA

DECK STABILITY

- Decks greater than 2 feet above grade shall be provided with diagonal bracing.

Diagonal Bracing

- Diagonal bracing shall be provided parallel to the beam at each corner post as shown in **Figure 15**.
- Diagonal bracing is prohibited on center posts.
- The bracing shall be bolted to the post at one end and beam at the other.
- Provide blocking between the adjacent joists, when a joist does not align with the bracing location.
- Decks attached to the house as shown in **Figure 17 or 17A** do not require diagonal bracing perpendicular to the house.
- Diagonal bracing parallel to the house may be omitted at the beam and posts adjacent to the house for a free-standing deck attached as shown in **Figure 16**.

Figure 15. Diagonal Bracing

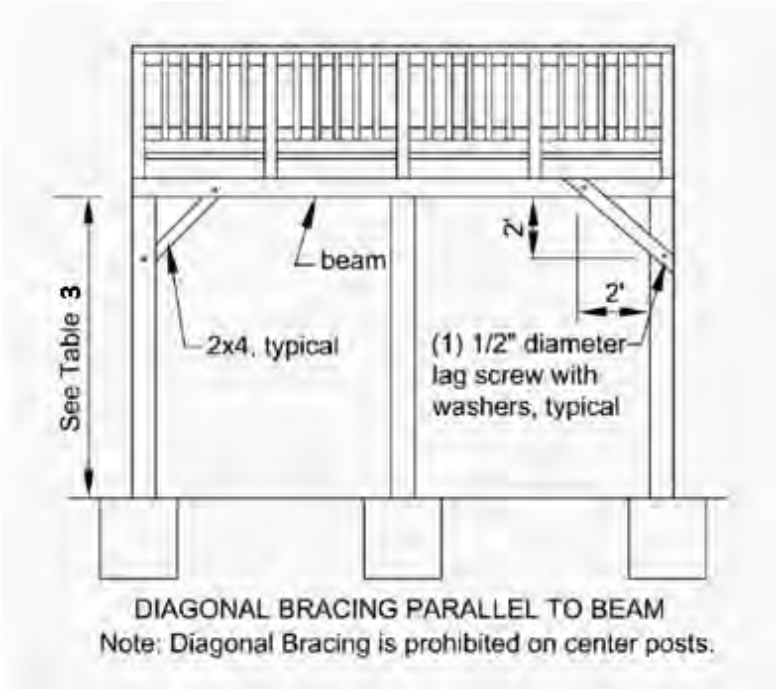

Courtesy of American Wood Council - Leesburg, VA

Diagonal Bracing Option

- Diagonal bracing as shown in **Figures 15A** and **15B**, is only allowed when the deck is supported by a ledger attached to the house as indicated in **Figures 10** and **11**; and lateral load connections as shown in **Figure 17 or 17A**, are provided near the outside edge of the deck on each side.
- Bracing material must be 2x6 preservative treated wood.
- Bracing must be attached with 3-16D nails at each joist.
- Nails shall be hot dipped zinc coated galvanized steel or stainless steel.

Figure 15A. Diagonal Bracing Attached to Underside of Joist on Single Span Deck

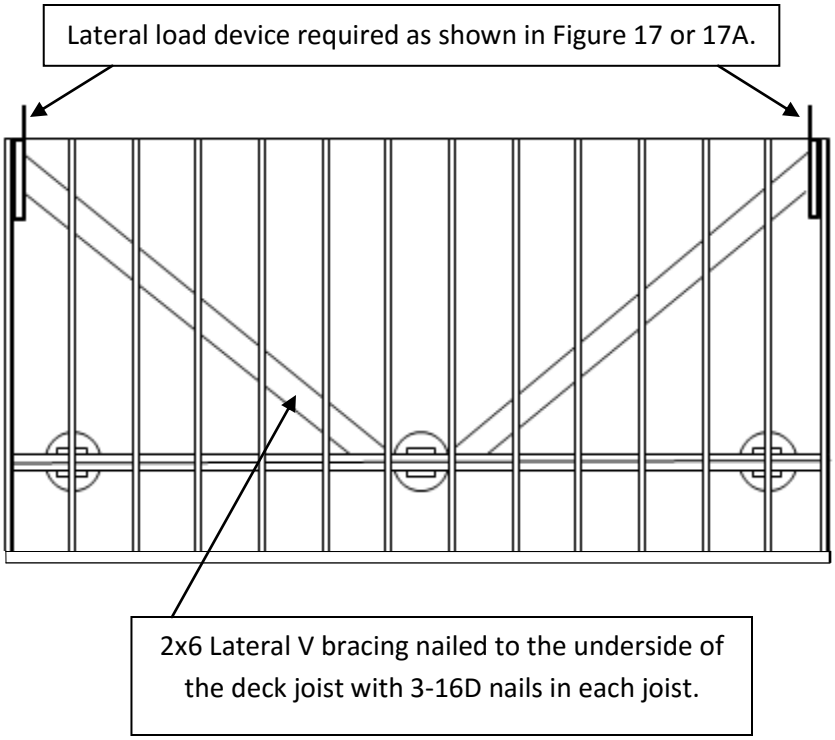

Figure 15B. Diagonal Bracing Attached to Underside of Joists on Double Span Deck

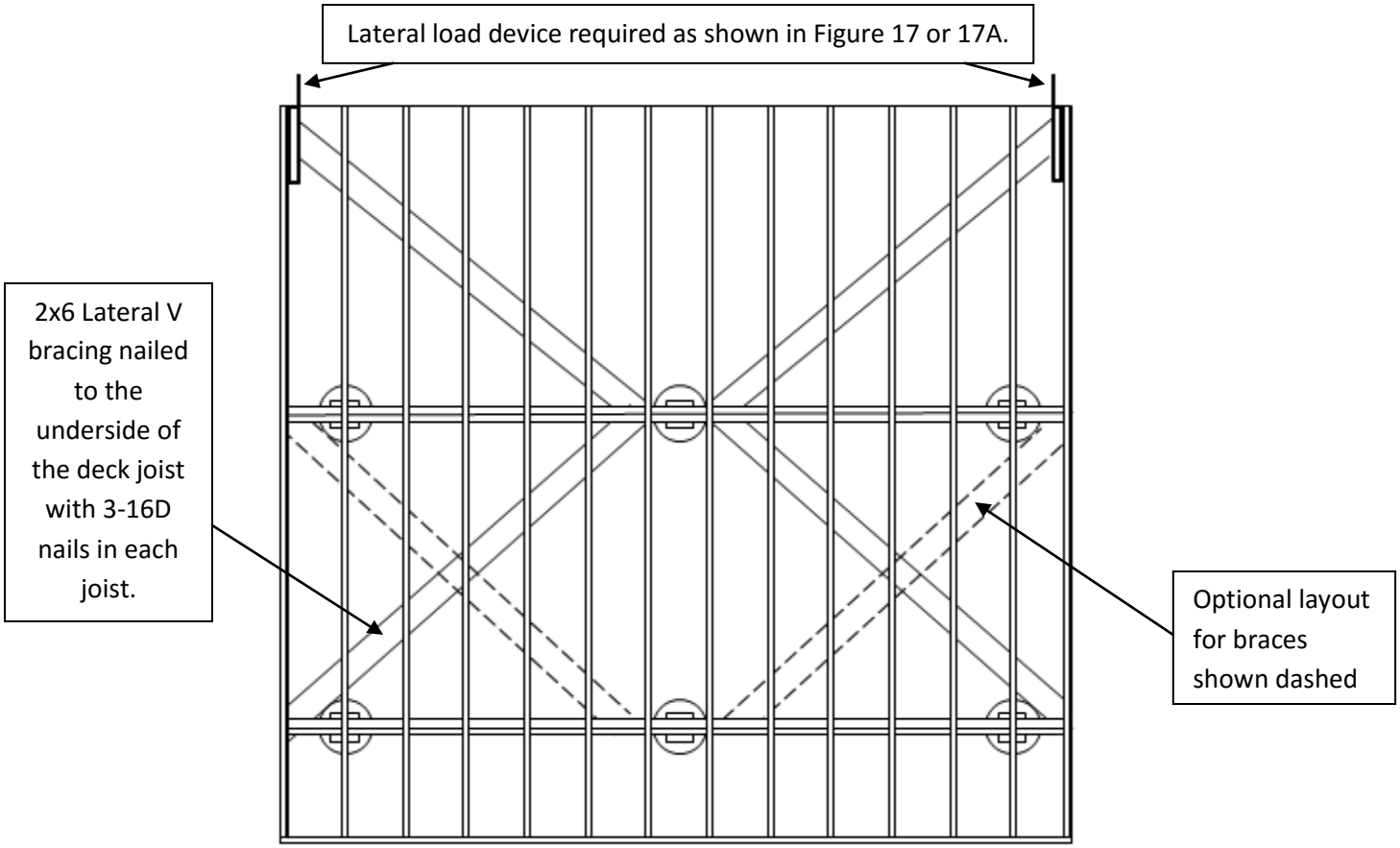

Free Standing Deck Attachment to House

- Attach the deck rim joist to the existing house exterior wall as shown in **Figure 16** for a free-standing deck.
- The wall must be sheathed with minimum $^{3}/_{8}$" wood structural panel sheathing.
- Use lag screws or thru-bolts when fastening to an existing band joist or wall stud.
- Use expansion anchors or epoxy anchors when fastening to concrete or masonry.
- **DO NOT ATTACH TO BRICK VENEERS**.
- Fasteners shall be 16" on center and staggered in 2 rows for free standing decks.
- Flashing is required over the rim joist. See "Ledger Board Attachment" for flashing details.

Figure 16. Attachment of Free-Standing Deck to House for Deck Stability

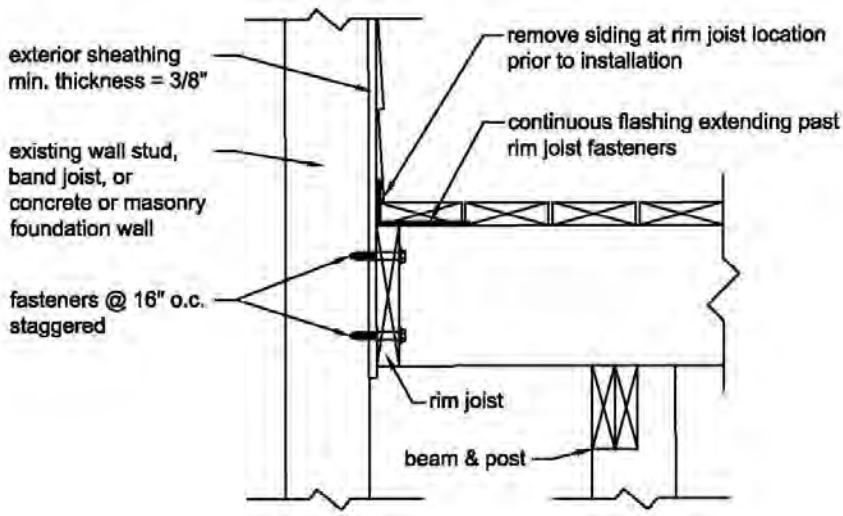

Courtesy of American Wood Council - Leesburg, VA

Deck Supported by Ledger - Attachment to House

- Where supported by attachment to an exterior wall (**Figures 10 or 11**), decks shall be positively anchored to the primary structure and designed for both vertical and lateral loads as applicable.
- The lateral load connection required shall be permitted to be in accordance with **Figure 17** or **17A**.
- Hold down tension devices shall be provided in not less than two locations per deck, and each device shall have an allowable stress design capacity of not less than 1,500 lbs or hold down devices with an allowable stress design capacity of not less than 750 lbs shall be installed per the manufacturers installation instructions in not less than four locations per deck evenly distributed along deck and one within 2" of each end of the ledger.

Figure 17. Lateral Load Device with Joists Parallel to Deck Joists

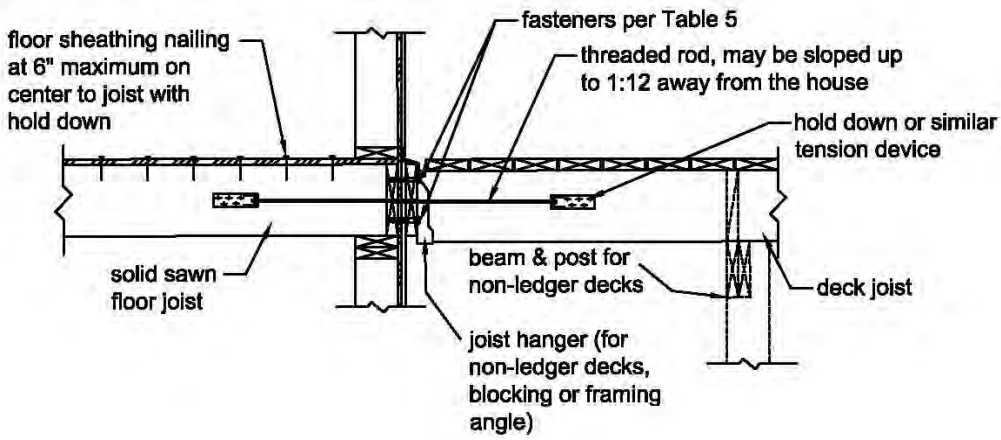

Courtesy of American Wood Council - Leesburg, VA

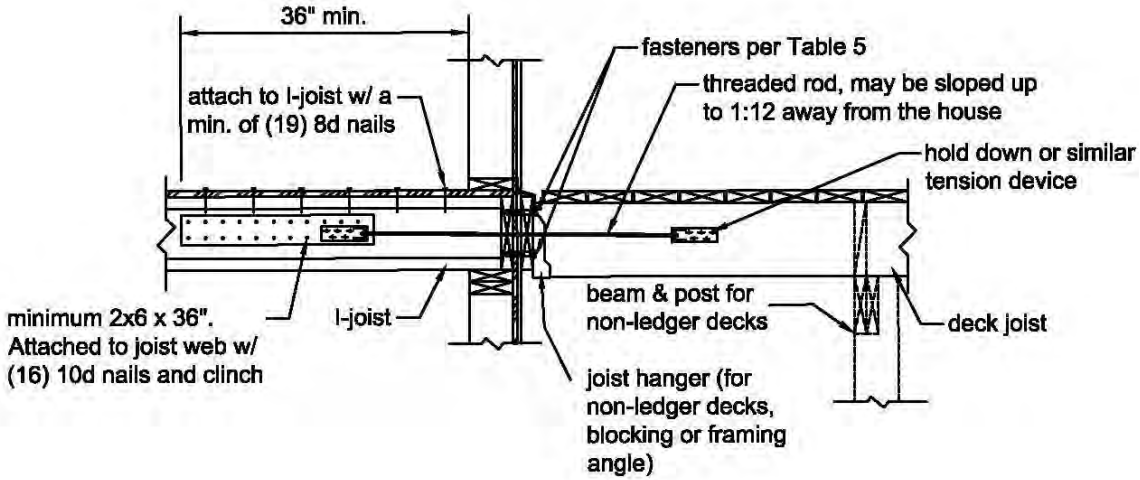

Courtesy of American Wood Council - Leesburg, VA

Figure 17A. Lateral Load Device with Joists Perpendicular to Deck Joists

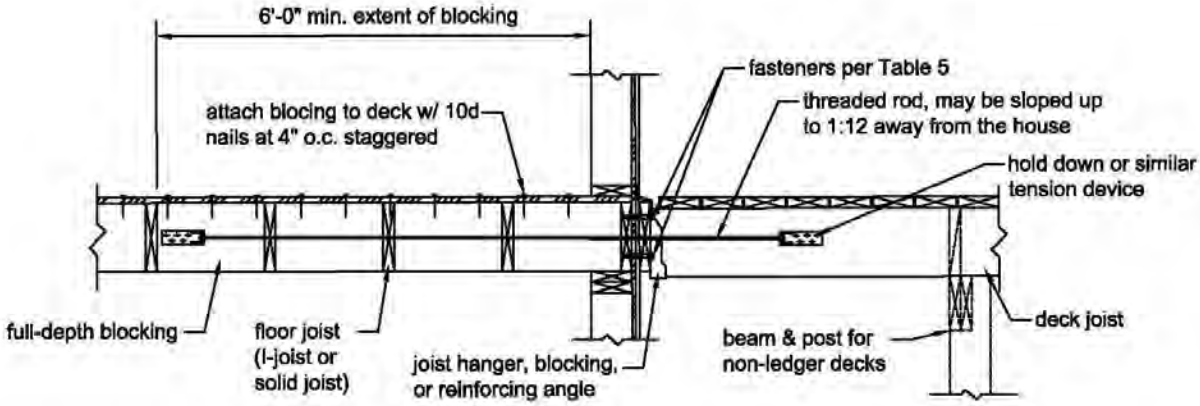

Courtesy of American Wood Council - Leesburg, VA

GUARDS

- A guard is required when a deck is greater than 30 inches above grade at any point within 36 inches of the deck edge.
- Wood-plastic composites used in guard systems shall be labeled, indicating the performance level and demonstrating compliance with ASTM D 7032. Wood-plastic composites shall be installed in accordance with the manufacturer's instructions.
- Alternative guard systems with a valid ICC Evaluation Service Report must be submitted to the building official for evaluation and approval prior to installation.
- Guards shall be no less than 36 inches above the adjacent walking surface.
- Stair guards shall have a height no less than 34 inches measured vertically from a line connecting the leading edges of the trends. See **Figure 26**.
- Openings in guards shall not allow the passage of a 4-inch diameter sphere through any opening from the walking surface to the required guard height.

Figure 18. Example Guard Detail

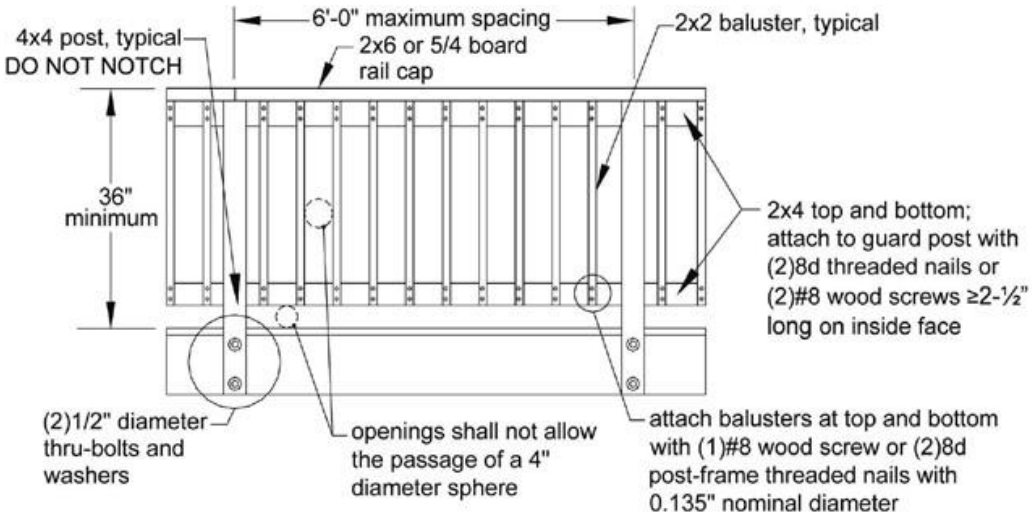

Courtesy of American Wood Council - Leesburg, VA

GUARD POST ATTACHMENT

- Guard posts shall be 4x4 minimum.
- Notching of guard posts; as shown in **Figure 19**, is prohibited.
- Guard posts shall be attached as shown in **Figures 20 and 21**.
- Hold down anchors shall have a minimum capacity of 1,800 lbs and must be installed in accordance with the manufacturer's instructions.

Figure 19. Post Notches Prohibited

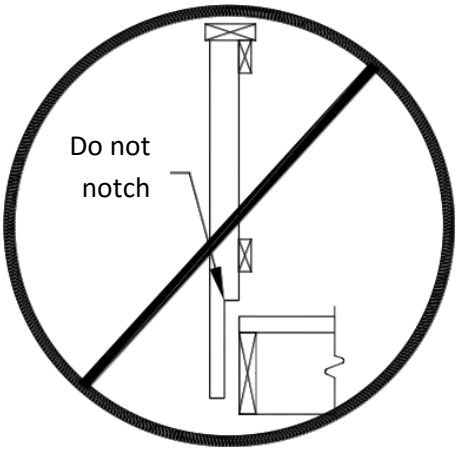

Figure 20. Guard Post to Outside Joist Example

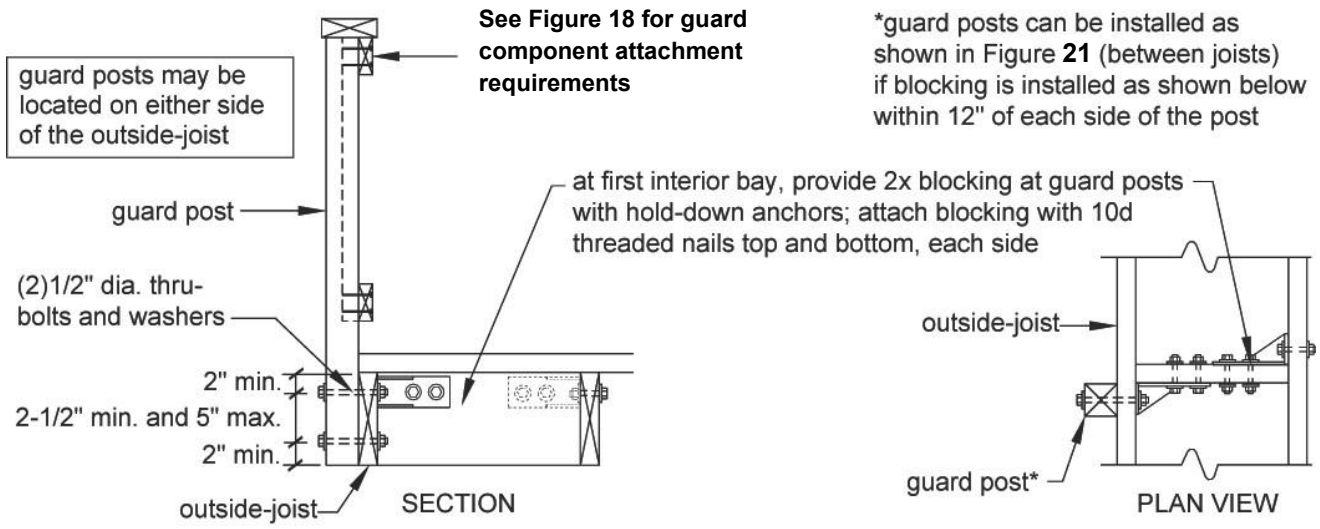

Courtesy of American Wood Council - Leesburg, VA

Figure 21. Guard Post to Rim Joist Example

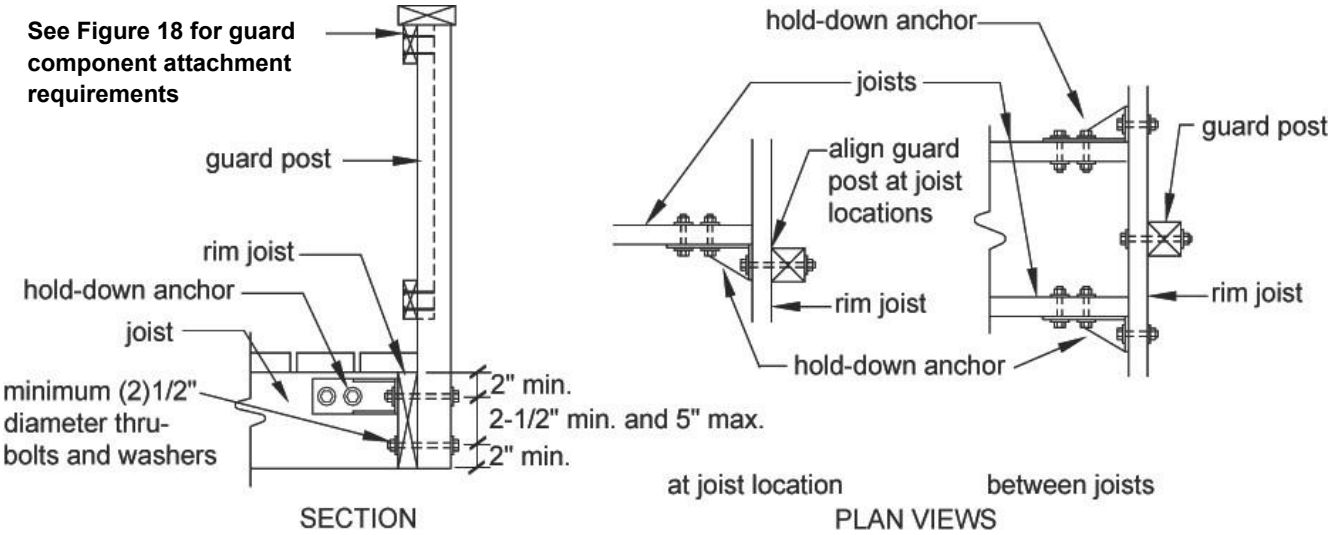

Courtesy of American Wood Council - Leesburg, VA

STAIR REQUIREMENTS

- ## Stair Dimensions

- Stairs shall have a minimum clear width of 36 inches.
- Stair trends, risers, nosing, and opening limitations shall meet the requirements shown in **Figure 22**. All tread, riser, and nosing dimensions shall not deviate from one another by more than 3/8" in any flight of stairs.
- Each landing shall be 36" minimum in the direction of travel.
- Stairs with a vertical height exceeding 12'0" are required to have an intermediate landing.
- A landing, with a width no less than the stair, is required at the top and bottom of each stairway.

Figure 22. Treads and Risers

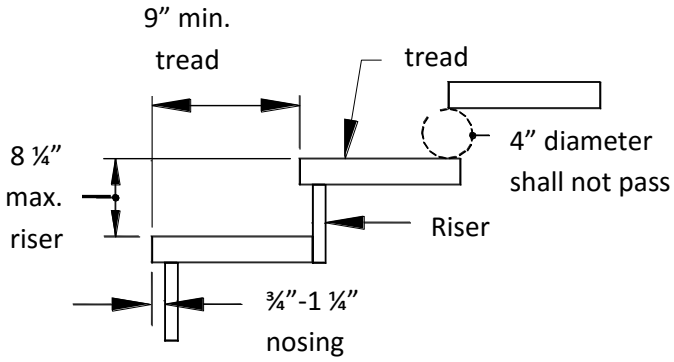

Stair Stringers

- Stair stringers shall be 2x12 minimum.
- Stair stringers shall not span more than the dimensions shown in **Figure 23** for cut and solid stringers.
- Stair stringers shall be 18" on center maximum.

Figure 23. Stair Stringer Requirements

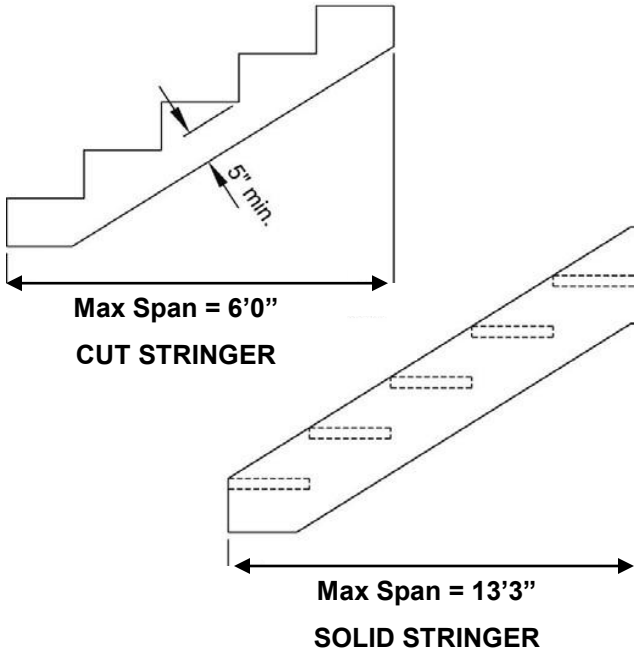

Courtesy of American Wood Council - Leesburg, VA

Figure 24. Stair Stringer Attachment Detail

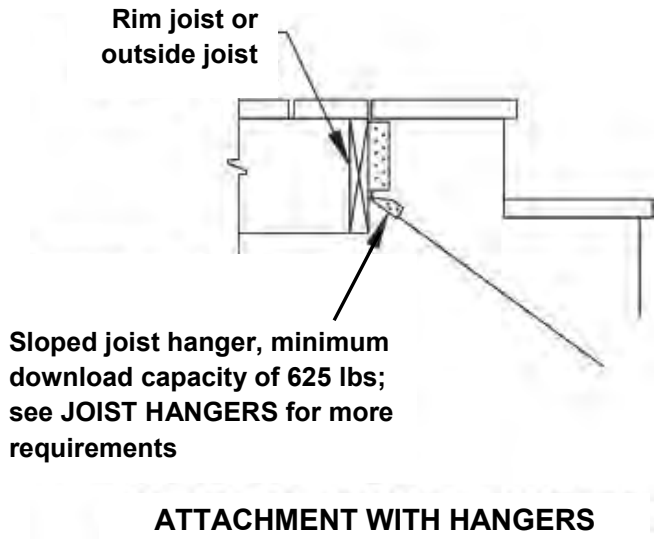

Courtesy of American Wood Council - Leesburg, VA

Treads

- Tread material shall be equivalent to the decking material specified on page 2.
- Stairs constructed with solid stringers shall have treads of 2x wood material. See **Figure 25**.

Figure 25. Tread Connection Requirements

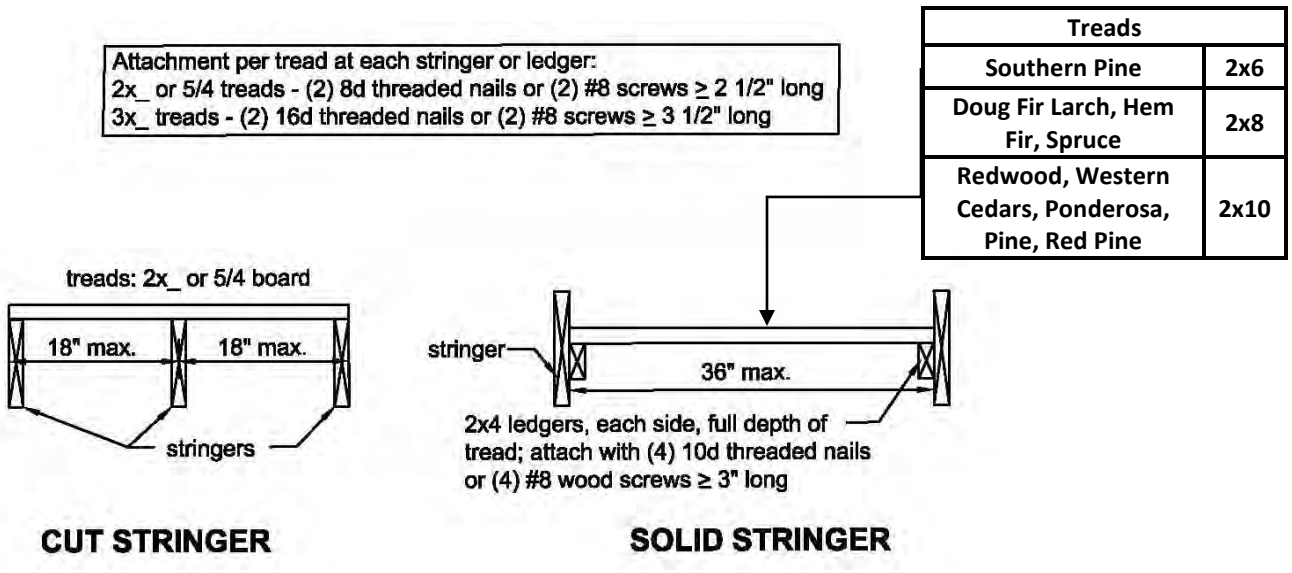

Treads	
Southern Pine	2x6
Doug Fir Larch, Hem Fir, Spruce	2x8
Redwood, Western Cedars, Ponderosa, Pine, Red Pine	2x10

Courtesy of American Wood Council - Leesburg, VA

Figure 26. Stair Guard Requirements

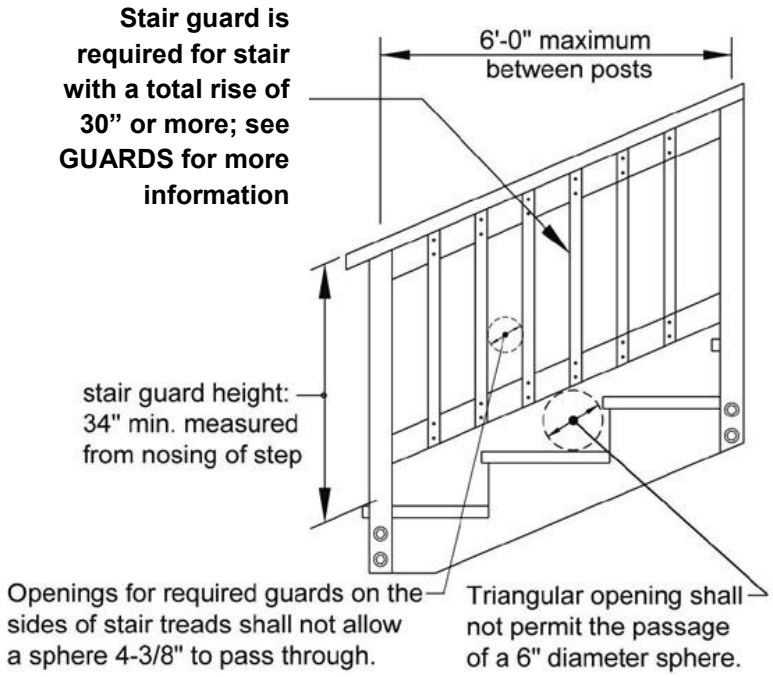

Courtesy of American Wood Council - Leesburg, VA

Stair Handrails

- Stairs with four or more risers shall have a handrail on at least one side at a height between 34 and 38 inches.
- Handrail height shall be measured vertically from a line connecting the leading edges of the treads. See **Figure 26**.
- Handrails shall be graspable and made of decay-resistant and/or corrosion resistant material. See **Figures 27 and 28**.
- Handrails shall have a smooth surface with no sharp corners.
- Handrails shall run continuously from a point directly over the lowest riser to a point directly over the higher riser and shall return to the guard at each end. See **Figure 29**.
- Handrails may be interrupted by guard posts at a turn in the stair.

Figure 27. Handrail Grip Size

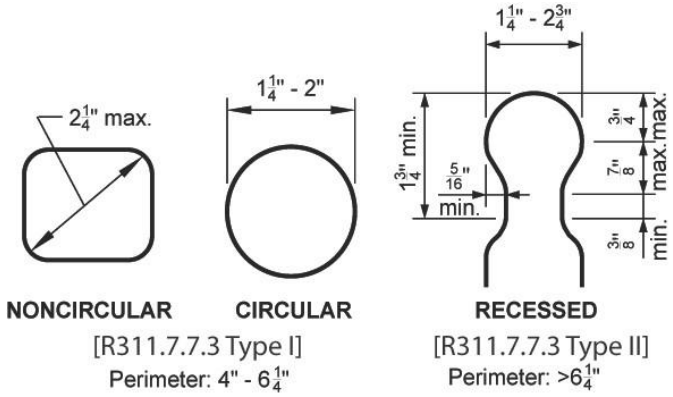

Courtesy of American Wood Council - Leesburg, VA

Figure 28. Handrail Mounting Examples

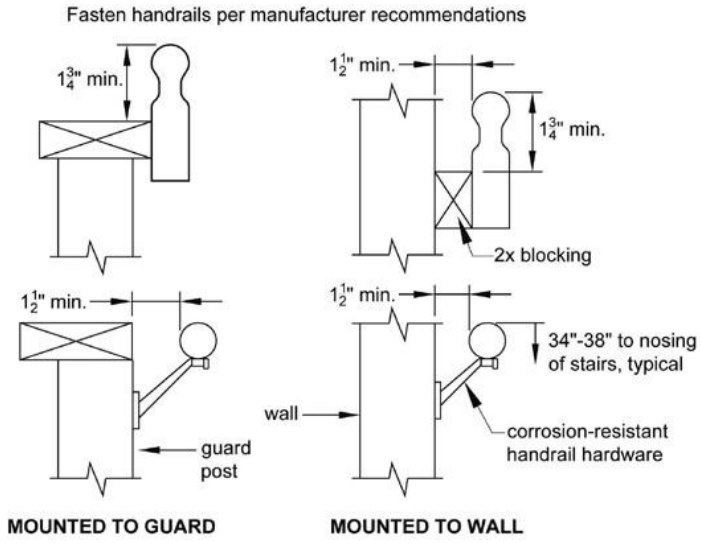

Courtesy of American Wood Council - Leesburg, VA

Figure 29. Miscellaneous Stair Requirements

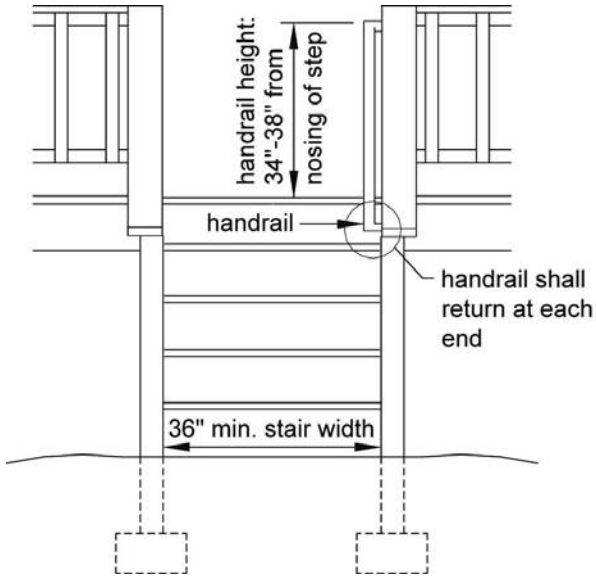

Courtesy of American Wood Council - Leesburg, VA

STAIR FOOTING

- Stair stringers shall be attached to the stair guard posts as shown in **Figure 30**.
- Stair guard posts footing shall bear on solid, undisturbed soil 42” below grade minimum.
- Stringers shall rest on 2x4 bearing block as shown in **Figure 30**.

Figure 30. Stair Footing Detail

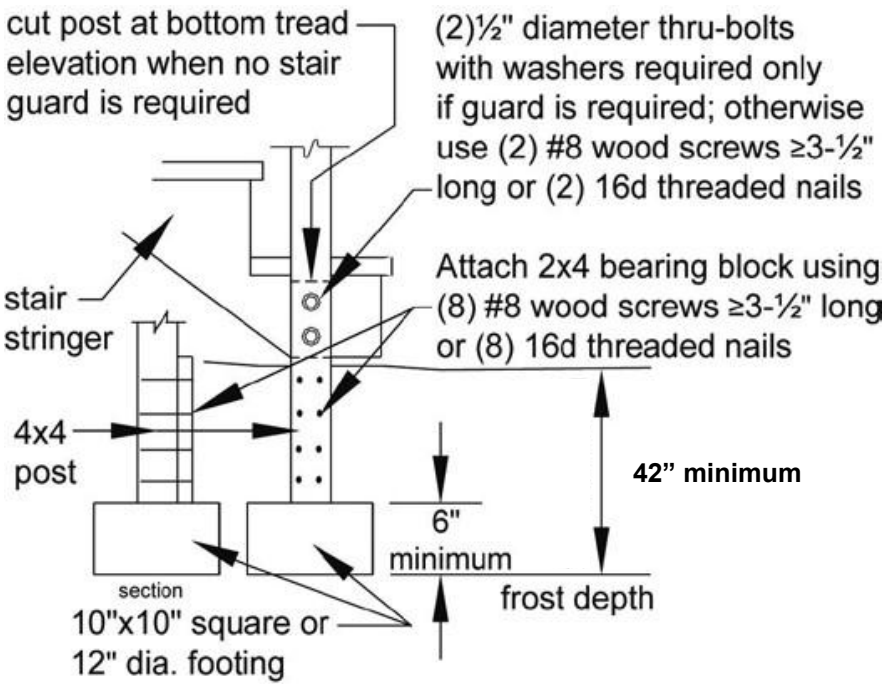

Courtesy of American Wood Council - Leesburg, VA

STAIR LIGHTING

- Stairways shall have a light source at the top landing that provides light to the stairs and landings.
- The light switch shall be controlled from the inside of the house. Motion detectors or timed switches are acceptable.

FRAMING AT CHIMNEY OR BAY WINDOW

- Framing at chimney or bay window shall be in accordance with **Figure 31**.
- Header plies shall be equal to the deck joist size.
- Header may span 6’0” maximum.

Figure 31: Detail for Framing Around Chimney or Bay Window

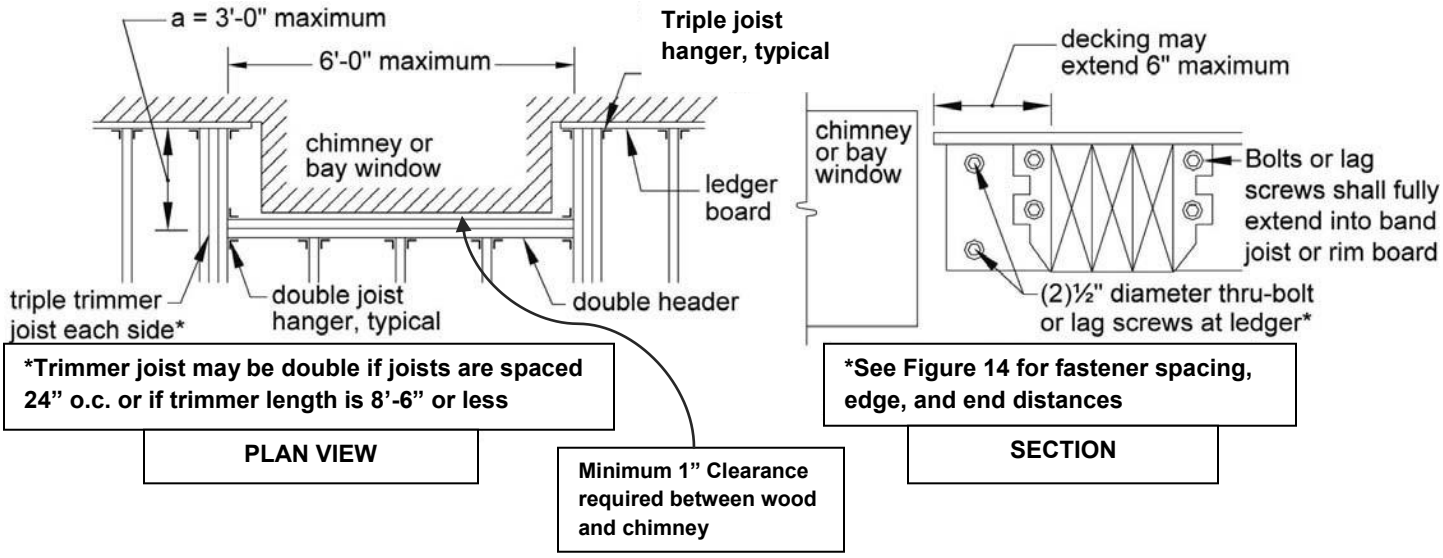

Courtesy of American Wood Council - Leesburg, VA

DECK FRAMING PLAN

Figure 32. Typical Deck Framing Plan

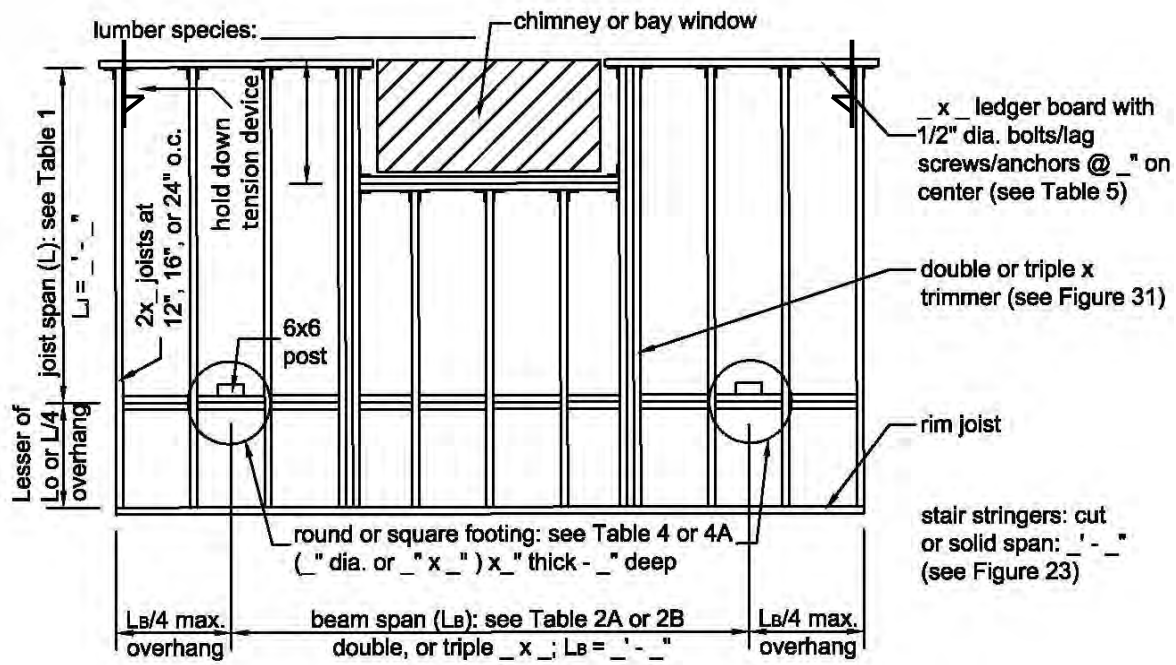

Courtesy of American Wood Council - Leesburg, VA

INSPECTIONS REQUIRED

1. **Post Hole and Ledger Board Inspection–After Post Holes are dug and Ledger Board is Installed**
    - Inspection of all post holes prior to placement of concrete.
    - Approved plans and a copy of this guide must be available to the inspector onsite.
    - All post holes shall be dug to solid, undisturbed soil at least 42" below grade.
    - All post holes within 5' of the house wall must be dug to undisturbed soil at the same elevation as the house foundation.
    - Inspection of ledger board attachment (if applicable) to the house bond or foundation wall.
    - The inspector will need access to the inside of the house to verify proper attachment of the ledger board. An adult needs to be present for the inspector to enter the house.
2. **Open Joist Inspection–Before Decking is Installed**
    - An open joist inspection is required on decks with less than 4' clearance between the deck floor joist and grade, or when special framing conditions are present.
3. **Final Inspection–After Deck is Complete**
    - Approved plans and a copy of this guide must be available to the inspector onsite.
    - The inspector will verify compliance with the building code and the requirements noted in this document.

Note:

This Guide Book is only intended to be a guide for Wood Deck Construction and is not all inclusive of the Building Code Requirements. For complete details of all requirements please see the Michigan Residential Code 2015. The information in this guide is subject to change without notice.

City of Rochester Hills

1. Information Required For Permit Application

A. Building Permit Application

- Forms are available online at www.rochesterhills.org or at the Building Department counter. Applications shall be filled out completely.

B. Application Fee

- See "Rochester Hills Building Permit Fees" - page 33-34.

C. Plot Plan – Three Copies

- See "Sample Plot Plan" - page 36.
- Please show your existing house and location of the proposed deck.
- Please indicate the shape and size of the deck, and the distances to all property lines and easements.

D. Construction Drawings – Two Sets

- Construction Drawings shall contain the following:
    - Footing, Post, Beam and Joist Layout
        - See Figure 32 on Page 28
    - Footing Size
    - Post and Beam Span, Size, and Location
    - Joist Span, Size, and Spacing
    - Profile of House
    - Ledger Board (if used)
    - Include all Dimensions
    - Drawn to Scale
    - Exterior of House (Brick or Siding)
    - Height of Deck
    - Graph Paper for Drawing provided on page 37

- Plans that contain all the necessary information and details will help speed up the plan review process. Plans shall match Plot Plans.

E. Owners may submit a Building Permit application for work on property that is or will be, upon completion, their place of residence. Owners of rental property may submit a Building Permit application to do maintenance and alterations to the rental property.

Please Note: Any Contractor, hired by an Owner for a contract price of $600.00 or more, shall be licensed in accordance with the State of Michigan Residential Builders Laws.

City of Rochester Hills

2. Registration of Builder's License

- A Builder shall be currently registered with the City of Rochester Hills to be able to submit a Building Permit application.
- All registrations expire May 31st.
- Builders not currently registered can register at the time of application by providing the following:
  - The original or a copy of the Builder's license
  - Registration fee is $45.00 for 1 year, $65.00 for 2 years or $85.00 for 3 years
  - Contractor Registration Form
    - The form shall have an original signature by the License Holder
    - The form shall be notarized (if not presented by the License Holder)

A Contractor Registration Form is available at our counter or online at www.rochesterhills.org
Note: All information noted above shall be submitted with the applicable Building Permit Application.

3. Plans Reviewed and Approved

All Building Permit Applications for wood deck construction will be processed within 48 hours from the time of application as an Expedited Building Permit.

Please Note

If the Plan Reviewer determines that the project needs a full review due to its complexity, the Permit Applicant will be notified that their project does not qualify for the Expedited Permit process. It will be processed as a regular permit. Please see the explanation for Expedited and Regular Permits below.

A. Expedited Permits

- Complete construction documents are not required, but the Deck shall comply with City Ordinances, this Wood Deck Construction Guide, and the Michigan Residential Code (MRC).
- The Permit Applicant will be notified if the plans do not meet Zoning or Building Code requirements, or if additional information is required.

B. Regular Permits

- Construction drawings and Plot Plans will be reviewed for compliance with City Ordinances, this Wood Deck Construction Guide, and the Michigan Residential Code (MRC).
- Plans are reviewed in the order they are received, based on the application date. Plan review time varies depending on the Building Department's work load.
- Plans that contain all the necessary information and details will help speed up the Plan Review process.
- The Permit Applicant will be notified if the plans do not meet Zoning Ordinance, or Building Code requirements, or if any additional information is required.

City of Rochester Hills

4. Permit Ready

A. Expedited Permits

- The Building Permit can be issued within 48 hours from the date of application as long as the required information has been provided. The Permit Applicant will be called when the Expedited Permit is ready to be picked up.

B. Regular Permit Applications

- The Permit Applicant will be called when the Building Permit is ready to be picked up.

Note:

- All Permit fees are due at the time of Permit issuance.
- Permit fees may be paid by cash, credit card, debit card or check.
- The Permit shall be issued within 6 months of the application date or the application will be canceled.
- Permits that have no activity for more than 6 months may be canceled.

City of Rochester Hills

BUILDING PERMIT FEES

Wood Decks

1. **Application Fee** ……..……$75.00
   - Non-refundable
   - Due when permit application is submitted

2. **Building Permit Fee**
   - Based on the Construction Valuation of the project excluding site work (refer to fee schedule on page 33):

   Construction Valuation

   (A) $1,000.00 and under ……$ 75.00
   $1,001.00 to $10,000 –
   $75.00 plus $20.00 for each additional $1,000.00 or part thereof over $1,000.00

   (B) $10,000.00 and over –
   $255.00 plus $6.00 for each additional $1,000.00 or part thereof over $10,000.00

3. **Building Plan Review Fee**
   $1.47 per $1,000.00 of the Construction Valuation, minimum fee …….....$75.00

   (**Please note**: This fee covers two reviews: the initial review and one re-review. A fee of $75.00 per hour will be charged for additional reviews.)

4. **Registration Fee for Residential Builder Licenses** ……..... One Year $45.00
   Two Years $65.00
   Three Years $85.00

5. **Re-inspection Fee** …… $75.00

City of Rochester Hills

SCHEDULE OF FEES FOR WOOD DECK CONSTRUCTION

CONSTRUCTION VALUATION	BUILDING PERMIT APPLICATION	BUILDING PERMIT FEE	BUILDING PLAN REVIEW	TOTAL PERMIT FEE
$0 --------- $1,000	$75	$75	$75	$225
$1,001 ---- $2,000	$75	$95	$75	$245
$2,001 ---- $3,000	$75	$115	$75	$265
$3,001 ---- $4,000	$75	$135	$75	$285
$4,001 ---- $5,000	$75	$155	$75	$305
$5,001 ---- $6,000	$75	$175	$75	$325
$6,001 ---- $7,000	$75	$195	$75	$345
$7,001 ---- $8,000	$75	$215	$75	$365
$8,001 ---- $9,000	$75	$235	$75	$385
$9,001 ---$10,000	$75	$255	$75	$405
$10,001 - $11,000	$75	$261	$75	$411
$11,001 - $12,000	$75	$267	$75	$417
$12,001 - $13,000	$75	$273	$75	$423
$13,001 - $14,000	$75	$279	$75	$429
$14,001 - $15,000	$75	$285	$75	$435
	$15,001 & over	see items 1 thru 6 on page 31		

City of Rochester Hills

INSPECTION REQUESTS

The Building Department offers three convenient methods to allow you to request inspections:

1. **24-hour Inspection Request Line** – An Inspection may be requested by calling our Inspection Request Line at (248) 656-4619 and providing the following information:
   - **The Street Address of the job site.**
   - **The Permit Number.**
   - **The type of Inspection you are requesting.**
   - **Please Note:** This 24-hour Inspection Request Line is for Building Department Inspection Requests only.
2. **Online Inspection Requests –** Inspections may also be requested by visiting the Building Department's website at www.rochesterhills.org. By clicking on the City Government tab, highlighting Departments, selecting Building, then Inspection Scheduling and filling in the appropriate information on the Online Inspection Request Form, you can schedule an inspection.
3. **QR Code Inspection Scheduling–** Scanning the QR Code will gain you direct access to the same Online Inspection Request Form as mentioned above. You will find the QR Code for scheduling inspections on many of our Building Department documents for your convenience.

Inspections scheduled before 6:30 a.m. that have been verified by the Building Department Staff will be scheduled for the same day between 9:00 a.m. and 4:00 p.m. Inspections will be done Monday through Friday. Inspections may be available outside the normal business hours by special arrangement. Additional fees for "After Hours" inspections shall be paid in advance of the inspection.

A request to cancel an Inspection needs to be called in to the Building Department at (248) 656-4615 before 9:00 a.m. on the day of the requested Inspection.

Please make sure your project is ready for your inspection. If your project is not ready for an inspection, the inspection will not be done and a $75.00 re-inspection fee may be charged. The following items shall be completed or in place at the time of the inspection:

- Safe access to the job site and throughout the area to be inspected.
- Approved plans on site.
- The Street address and lot number posted and visible from the street.
- All construction materials and debris contained on the project property.

Inspection results will be left on site after each inspection has been completed.

Green Tag Your Inspection has been approved.

Inspector's Report Your Inspection has not been approved. The Inspector's Report will contain a list of items that need to be addressed before calling for a re-inspection. A $75.00 re-inspection fee will be charged for any items not corrected at the time of the second inspection. Inspections shall be approved before proceeding with the next phase of your construction project.

It is your responsibility as the permit holder to check the job site for the inspection results. Please read the information on all Green Tags or Inspector's Reports. If you have any questions regarding this information, please call (248) 656-4615 between 8:00 a.m. and 9:00 a.m. to speak with the Inspector that wrote the Inspector's Report.

City of Rochester Hills

Please make sure the location of your deck meets the following requirements:

- Decks cannot be built within any easement or right-of-way
- Uncovered decks may not be built more than 10 feet into the required front yard
- All decks shall be 5 feet or more from the side property line
- Decks cannot be located within a steep slope setback. Please contact the Building Department at (248) 656-4615 regarding restrictions for building on properties with steep slopes.

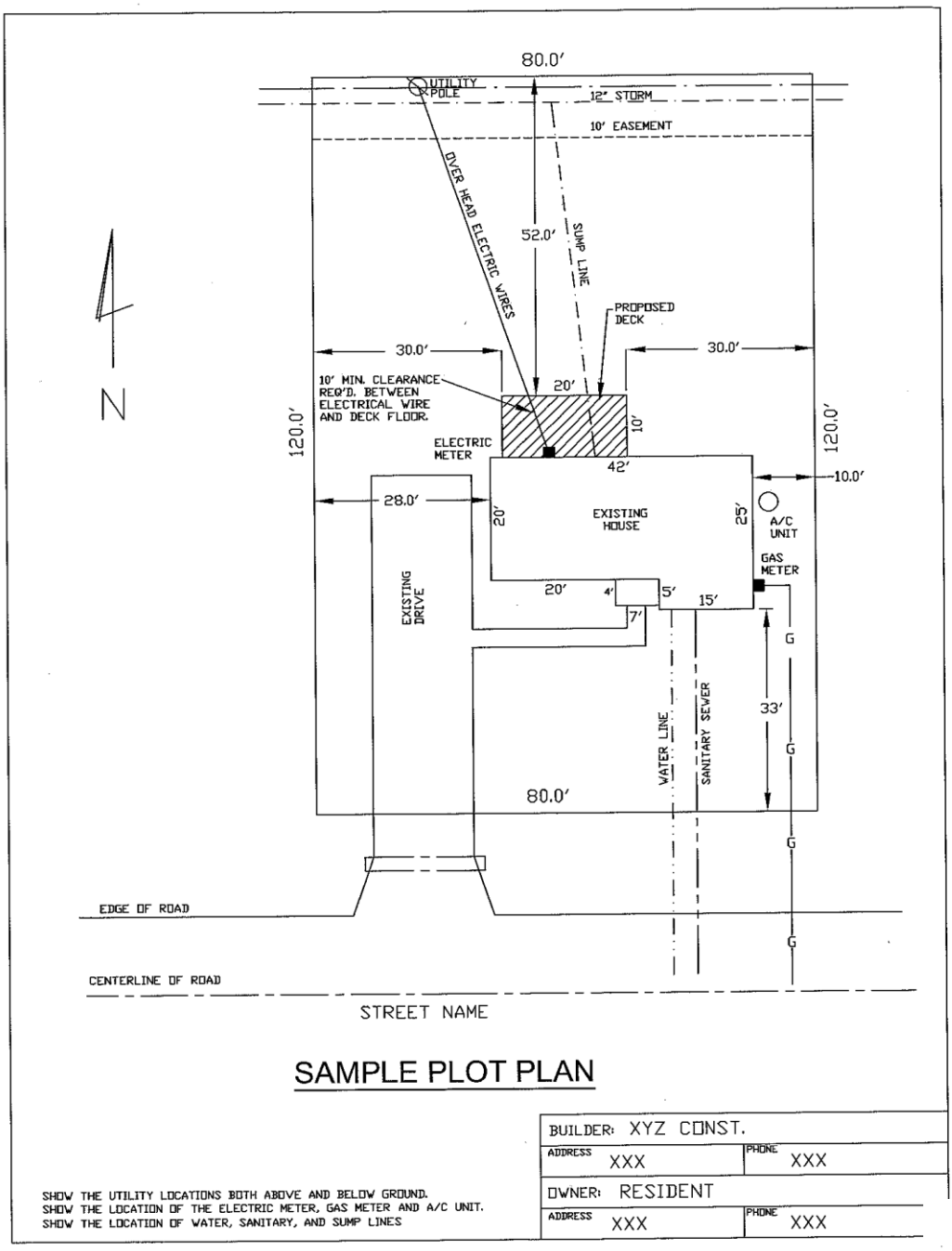

City of Rochester Hills

Project Address: _____